ZTE Blade V70

User Manual

About This Manual

Thank you for choosing this ZTE mobile device. In order to keep your device in its best condition, please read this manual and keep it for future reference.

Copyright

Copyright © 2025 ZTE CORPORATION

All rights reserved.

No part of this publication may be quoted, reproduced, translated or used in any form or by any means, electronic or mechanical, including photocopying and microfilm, without the prior written permission of ZTE Corporation.

Notice

ZTE Corporation reserves the right to make modifications on print errors or update specifications in this guide without prior notice. This manual has been designed with the utmost care to ensure the accuracy of its content. However, all statements, information and recommendations contained therein do not constitute a warranty of any kind, either expressed or implied. Please refer to *For Your Safety* to be sure to use your phone properly and safely. We offer self-service for our smart terminal device users. Please visit the ZTE official website (at https://ztedevices.com) for more information on self-service and supported product models. Information on the website takes precedence.

Disclaimer

ZTE Corporation expressly disclaims any liability for faults and damages caused by unauthorized modifications of the software.

Images and screenshots used in this manual may differ from the actual product. Content in this manual may differ from the actual product or software.

Trademarks

ZTE and the ZTE logos are trademarks of ZTE Corporation.

Android™ is a trademark of Google LLC.

The *Bluetooth*® word mark and logos are registered trademarks owned by the Bluetooth SIG, Inc. and any use of such marks by ZTE Corporation is under license.

microSDXC Logo is a trademark of SD-3C, LLC.

FOR DTS PATENTS, SEE HTTP://XPERI.COM/DTS-PATENTS/. MANUFACTURED UNDER LICENSE FROM DTS, INC. AND ITS AFFILIATES. DTS, THE DTS LOGO, AND DTS AUDIO PROCESSING ARE REGISTERED TRADEMARKS OR TRADEMARKS OF DTS, INC. AND ITS AFFILIATES IN THE UNITED STATES AND/OR OTHER COUNTRIES. © DTS, INC. AND ITS AFFILIATES. ALL RIGHTS RESERVED.

Other trademarks and trade names are those of their respective owners.

Instructional Icons

	NOTE	Additional information, supplementary instruction or tips for the operation of the product.
	CAUTION	Safety information that, if ignored, may cause minor damage to the equipment or service interruption.
	WARNING	Safety information that, if ignored, may cause serious damage to the equipment or danger to personal safety.

Version No.: R1.0

Edition Time: March 3, 2025

Contents

Exciting New Features 11
Face Recognition 11
Fingerprint Identification 11
Live Island 11
High Screen Refresh Rate 11
Private Space 12
Phone Switch 12
Extended RAM 12

Getting Started 13
Getting to Know Your Phone 13
Knowing the Keys 15
Setting Up Your Phone 16
Charging the Phone 18
Checking the Battery Information 20
Battery Maintenance Tips 20
Powering On/Off 22
Setting Up for the First Time 23
Locking/Unlocking the Screen and Keys 23
Getting to Know the Home Screen 24

Personalizing 26
Selecting the Home Screen Mode 26
Setting the Navigation Style 27
Changing the System Language 29

Switching to Vibration or Silent Mode 29
Using Do Not Disturb Mode 30
Choosing Your Wallpaper 31
Changing the Theme 31
Setting Screen Refresh Rate 32
Using Dark Mode 32
Using Read Mode 32
Using Night Light 33
Setting the Top Area 34
Enabling Full-Screen Display 34
Using the Phone Storage as the Extended RAM 35

Knowing the Basics 36

Phone Status Icons 36
Notification Icons 37
Using Quick Settings 37
Using App Shortcuts 38
Notification Dots 39
Switching Apps 40
Organizing Apps 41
Using the Live Island 41

Security 43

Protecting Your Phone With Screen Locks 43
Using Your Fingerprint 44
Using Face Recognition 45
Protecting Your Phone With App Pinning 48

Connecting to Networks 50
Connecting to Mobile Networks 50
Connecting to Wi-Fi 52

Connecting to Devices 53
Connecting to Bluetooth Devices 53
Exchanging Data via NFC 54
Connecting to Your Computer via USB 54
Using USB On-The-Go (OTG) 55

Sharing Your Mobile Data Connection Through Tethering 56

Phone Calls 58
Placing Calls 58
Answering or Rejecting Calls 60
Using Options During a Call 60
Managing Multi-party Calls 62

Contacts 64
Adding a New Contact 64
Importing and Exporting Contacts 64
Setting a Ringtone for a Contact 65
Setting Call Blocking 66

Messages 67
Sending a Message 67
Message Options 68

Camera **70**
Capturing a Photo 70
Recording a Video 72
Using AI Scene Recognition 73
Using Portrait Mode 74
Using Pro Mode 74
Using Other Camera Modes 75

Photos **77**
Opening Photos 77
Sharing Your Photos or Videos 77
Deleting Unwanted Photos or Videos 77
Restoring a Photo or Video 78

Voice Recorder **79**
Recording a Voice Memo 79
Playing a Voice Memo 80
Trimming a Voice Memo 80

Phone Switch **81**

Private Space **83**
Opening Private Space for the First Time 83
Encrypting Pictures/Videos/Files 84
Locking Apps 85
Using Password Book 85
Setting Private Space 86

Settings **88**
Wi-Fi 88
Bluetooth 88
Mobile Network 88
Connected Devices 90
Theme and Personalization 91
Home Screen 91
Display 91
Notification & Status Bar 91
Sound and Vibration 92
SyncMind 92
Features 92
Apps 94
Battery 95
Storage 95
Location 96
Security and Privacy 96
Safety & Emergency 100
Passwords and Accounts 101
Digital Wellbeing and Parental Controls 101
Google 102
System 103
About Phone 104

Accessibility **105**
Display 105

Interaction Controls 110
Captions 113
Audio 114
Accessibility Shortcuts 116
Text-to-Speech Output 116
Select to Speak 117
Switch Access 118
TalkBack 119

For Your Safety 121

General Safety 121
Radio Frequency (RF) Energy 123
Distractions 125
Product Handling 125
Electrical Safety 130
Radio Frequency Interference 131
Explosive Environments 133

Disposal of Your Old Appliance 134

UK PSTI Statements of Compliance 135

EU DECLARATION OF CONFORMITY 135

ErP Conformity 136

Appendix 137

Exciting New Features

Face Recognition

You can use your face to unlock the screen, access Private Space, or open the apps locked by Private Space. Your phone can automatically turn on the screen and recognize your face to unlock the screen each time you raise your phone.

Fingerprint Identification

With the fingerprint sensor on the **Power** key of your phone, you can register up to 5 fingerprints and use them to unlock the phone, access Private Space, open the apps locked by Private Space, or open bound apps when the screen is off or locked.

Live Island

You can view live activities such as battery status, earbuds connection, phone calls, voice recording, and countdown timer on the Live Island at the top of the screen.

High Screen Refresh Rate

You can set the screen refresh rate to 120 Hz, 90 Hz or 60 Hz. A higher screen refresh rate will help deliver a smoother visual experience, which may consume more battery power.

Private Space

Private Space allows you to encrypt your files, lock your apps and manage your account passwords. To access Private Space, you need to draw a pattern, enter a PIN, or use your registered fingerprint or face.

Phone Switch

You can use Phone Switch to easily transfer data such as contacts, messages, pictures, audio, videos, etc. from your old Android phone to the new one. You need to install Phone Switch on both phones first.

Extended RAM

The phone’s Random Access Memory (RAM) is used to handle all active tasks and apps. You can set part of the phone storage as the extended RAM when your phone storage is sufficient, and the phone will run more smoothly.

Getting Started

Getting to Know Your Phone

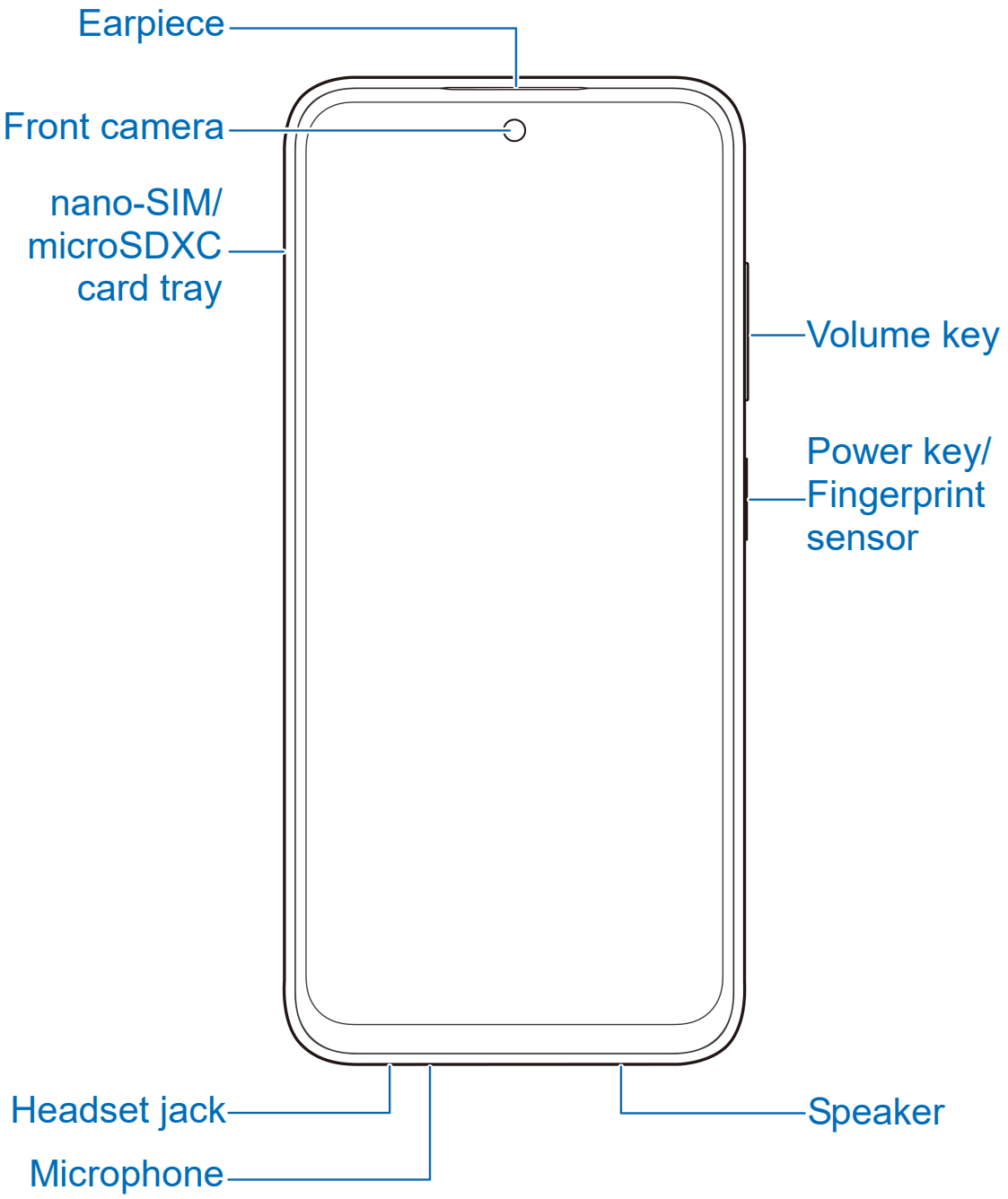

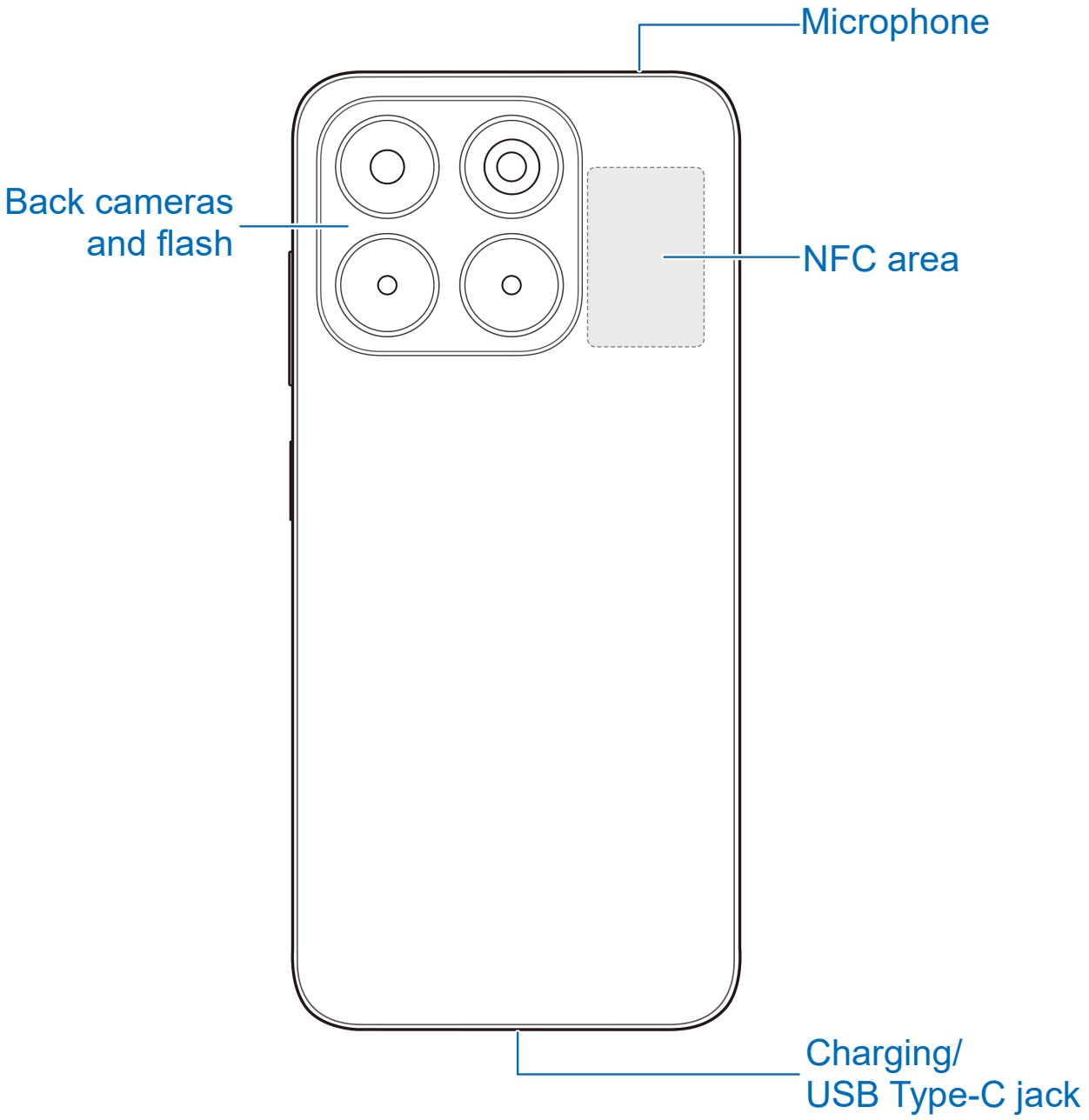
Microphone
Back cameras
and flash
NFC area
Charging/
USB Type-C jack

Knowing the Keys

Key	Function
Power key/ Fingerprint sensor	• Press and hold for about half a second to launch the Google Assistant. • Press and hold for over 3 seconds to open the power off/restart menu. • Press to turn off or on the screen display. • Touch to unlock the phone if a fingerprint is registered. See *Using Your Fingerprint*.
Volume key	Press or hold either end of the key to turn the volume up or down.

NOTES:

- You can also press and hold the **Power** key for about half a second to power off or restart. See “Wake up Google assistant” in *Features*.
- You can use virtual keys or gestures to navigate your phone. See *Setting the Navigation Style*.

Setting Up Your Phone

The nano-SIM card(s) can be installed or removed while the phone is turned on.

WARNING!

To avoid damage to the phone, do not use any other kind of SIM cards, or any non-standard nano-SIM card cut from a SIM card. You can get a standard nano-SIM card from your service provider.

1. Insert the tip of the tray eject tool into the hole beside the card tray.

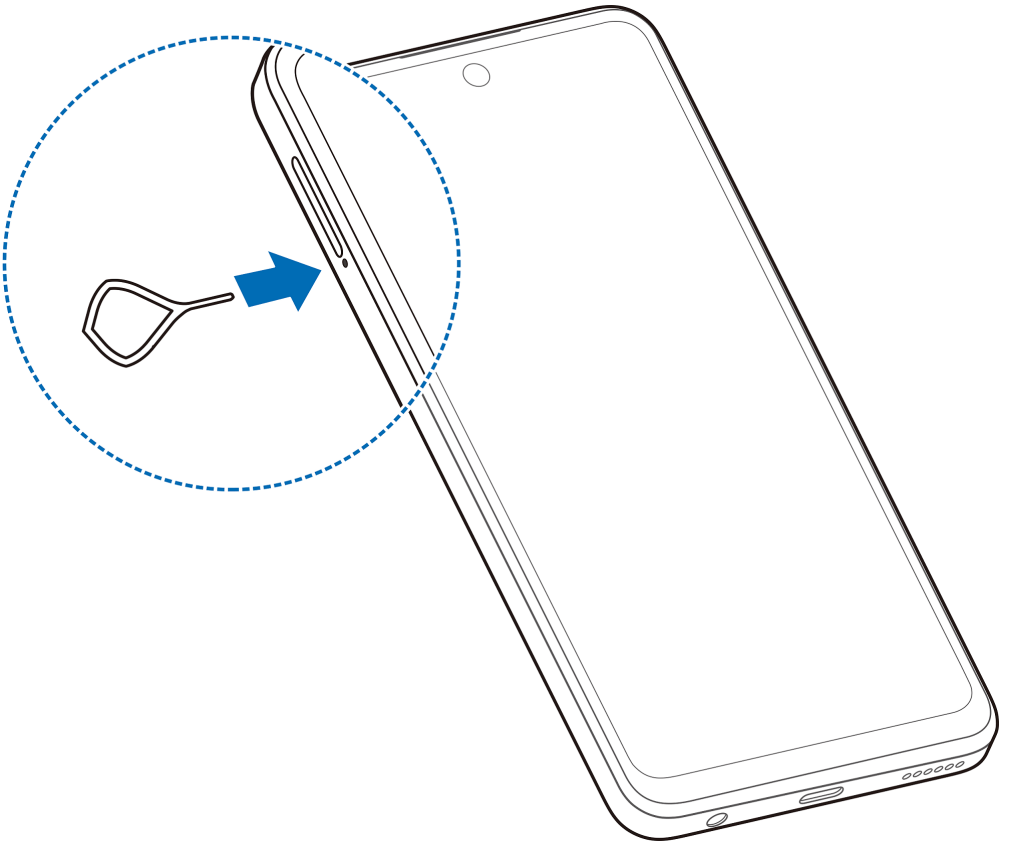

NOTE:

Please use the tray eject tool included in the box. Otherwise the card tray may not be ejected.

CAUTION:

Never replace the included tray eject tool with sharp objects. Ensure that the tray eject tool is perpendicular to the hole. Otherwise, the phone may be damaged.

2. Pull out the card tray. You can place the nano-SIM cards on the right and middle card slots, and place a microSDXC™ card (optional) on the left card slot, as shown. Carefully slide the tray back into place.

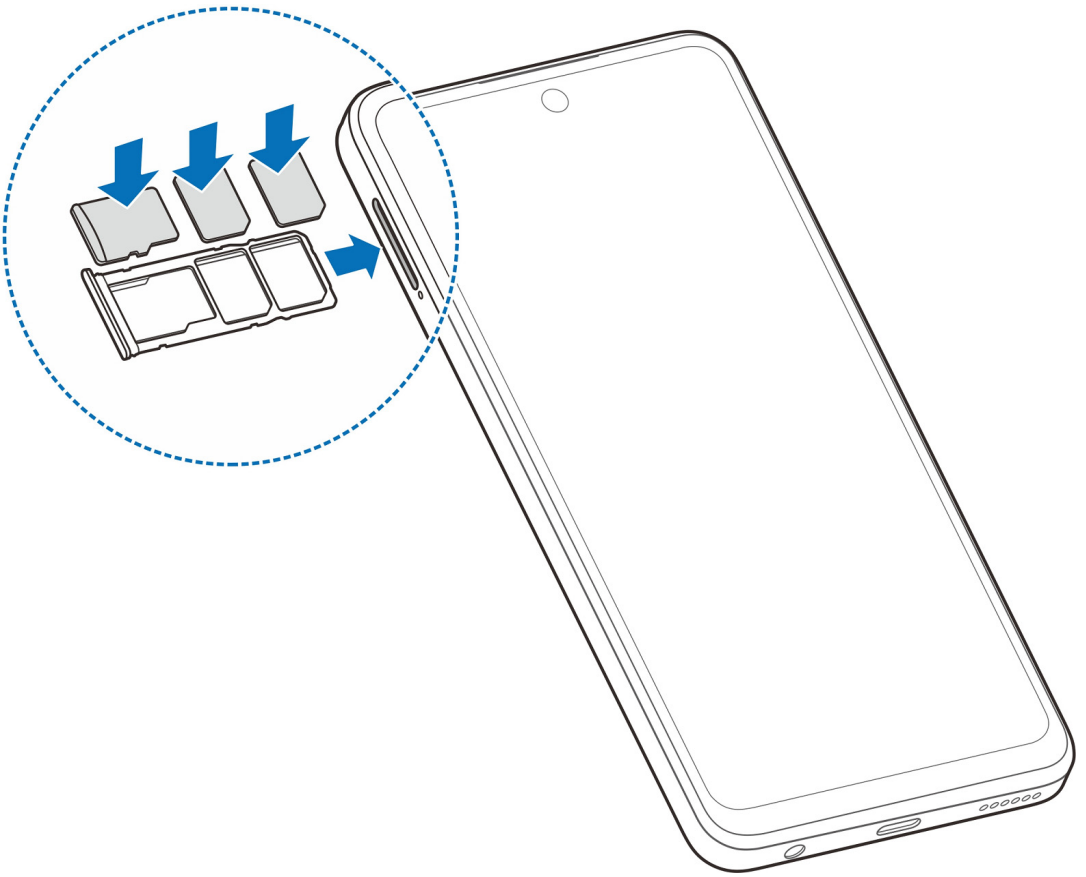

NOTE:

If two nano-SIM cards are installed, both cards can connect to the 4G, 3G, or 2G network, and either card can be used for mobile data.

Charging the Phone

Your phone's battery should have enough power for the phone to turn on, find a signal, and make a few calls. You should fully charge the battery as soon as possible.

WARNING!

Use only compatible chargers and USB Type-C cables. The use of incompatible accessories could damage your phone or cause the battery to explode.

WARNING!

To remove or replace the battery, contact an authorized service provider or follow the repair instructions. If the phone is not properly disassembled, it may cause personal injury and damage to the battery and phone.

1. Connect the adapter to the charging jack. Do not force the connector into the jack.

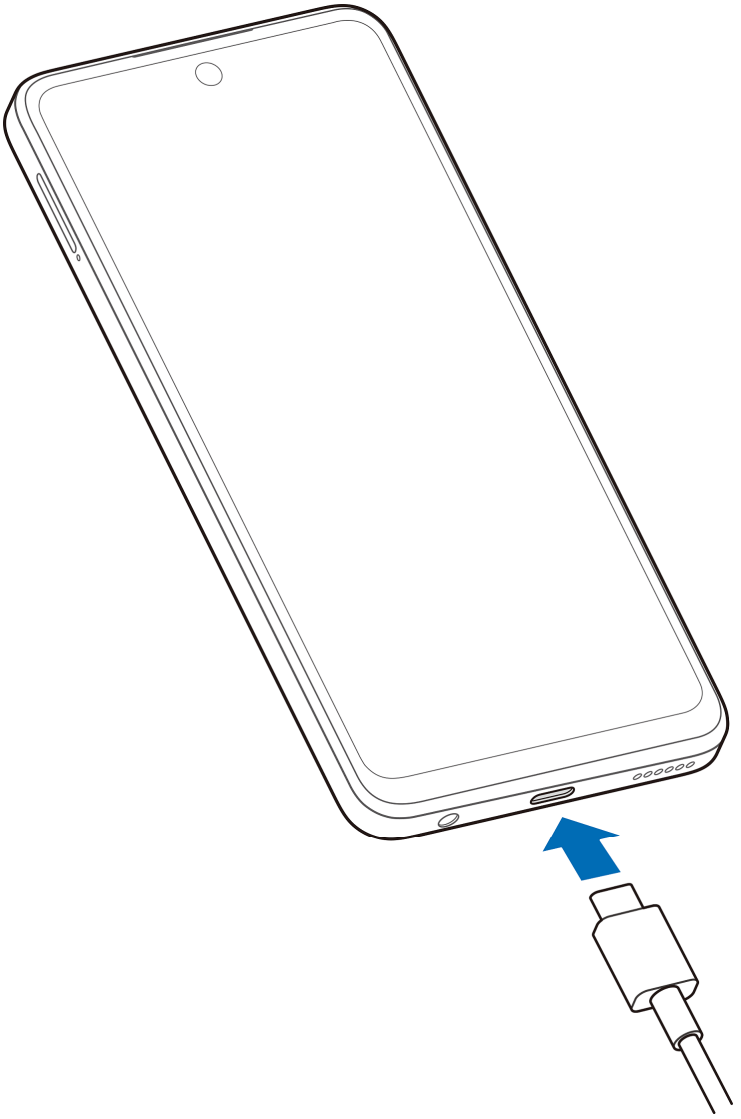

2. Connect the charger to a standard AC power outlet.
3. Disconnect the charger when the battery is fully charged.

NOTES:

- If the battery is extremely low, you may be unable to power on the phone even when it is being charged. In this case, try

again after charging the phone for at least 20 minutes. Contact the customer service if you still cannot power on the phone after prolonged charging.

- For environmental reasons, this package may not include a charger. This phone can be powered with most USB power adapters and a cable with USB Type-C plug.

Checking the Battery Information

You can view measured state of battery health, battery manufacturing date, date of first use of the battery, and number of full charge/discharge cycles. Just open **Settings** and touch **Battery > Battery health**.

Battery Maintenance Tips

Your phone provides various options that help you conserve battery power and protect the battery. You can follow the tips below.

- Reduce the screen backlight time.
- Lower the screen brightness.
- Reduce the screen refresh rate.
- Turn Wi-Fi, Bluetooth, GPS and auto-sync off when not in use.
- Turn on Dark mode.

- Use the Optimize Battery Usage feature to save battery power. Open **Settings** and touch **Battery > Optimize Battery Usage**.
- Enable the Power saver or Ultra Power saver feature. Open **Settings** and touch **Battery > Power saver** / **Ultra Power saver**.
- Optimize the auto-start behavior, the secondary launch behavior, and the background running behavior of apps to save battery power. Open **Settings** and touch **Battery > Apps AI-control**.
- Automatically close the apps that have not been used for a long time. Open **Settings** and touch **Battery > More Settings > Scenario AI-optimization > Optimize when app not in use**.
- Control the behavior of apps to reduce power consumption when the phone is in a long standby period. Open **Settings** and touch **Battery > More Settings > Scenario AI-optimization > Sleep mode**.
- To prevent overcharging the battery and shortening its lifespan, you can set the phone to stop charging when the battery level reaches 80%. Open **Settings** and touch **Battery > Battery health > Battery protection**, and then select **80% upper limit**.
- To maintain battery health, charging automatically stops once the battery reaches full charge. If the phone remains connected to the charging source, charging will resume when

the battery level drops below 95%. During this cycle, the displayed battery level stays at 100%. This feature is enabled by default. To access this feature, open **Settings** and touch **Battery > Battery health > Battery protection**, and then select **Basic**.

- To protect the battery, avoid charging the battery in high temperature environments.
- Unplug the charger after the battery is fully charged.
- To guarantee the charging performance, please use a compatible charger.
- If you use a power source like a computer instead of the charger, the charging may be slower because of the reduced electric current.
- If you use your phone during charging, it may take longer to fully charge the battery.

Powering On/Off

- Press and hold the **Power** key to turn on your phone.
- To power off, press and hold the **Power** key until the power off/restart menu appears, and then touch ⏻ **>** ⏻.

NOTE:

If the screen freezes or takes too long to respond, try pressing and holding the **Power** key for over 10 seconds to restart the phone.

Setting Up for the First Time

When you first power on your phone after you purchase it or reset it to factory settings, you need to do some settings before using it.
Select the language and follow the on-screen prompts to set up your phone.

Locking/Unlocking the Screen and Keys

Your phone allows you to quickly lock the screen and keys (put the phone to sleep mode) when not in use and to turn the screen back on and unlock it when you need it.

To lock the screen and keys:

To quickly turn the screen off and lock the keys, press the **Power** key.

NOTE:
To save battery power, the phone automatically turns off the screen after some time of inactivity. You will still be able to receive messages and calls while the phone screen is off.

To unlock the screen and keys:

1. Press the **Power** key to turn the screen on.
2. Swipe up on the screen.

NOTE:
If you have set a face verification, a fingerprint, an unlock pattern,

a PIN or a password for your phone (see *Using Face Recognition*, *Using Your Fingerprint* and *Protecting Your Phone With Screen Locks*), you'll need to use your face or fingerprint, draw the pattern, or enter the PIN/password to unlock your screen.

NOTE:

You can swipe up on to use the flash and voice recorder, or swipe up on to open the camera.

Getting to Know the Home Screen

Your home screen is extendable, providing more space for apps, widgets, or folders. Simply swipe left or right on the home screen to see the extended panels. You can also add or remove home screen panels, or set the main home screen panel.

Swipe right on the left-most screen panel to access Z-Board. You can view information such as fitness data, weather, recommended apps, and news on this screen.

To add a new home screen panel:

Touch and hold an item such as an app or a folder on the home screen and drag it to the right edge of the screen to create a new home screen panel and put the item on it.

NOTE:

No empty home screen panel is allowed to exist. If the app or folder is the only item on the current home screen panel, the panel will be deleted as you remove the item.

To set the main home screen panel:

1. Touch and hold an empty area of the home screen. You can slide left or right to view the home screen panels.
2. Touch ⌂ at the top of a home screen panel to set it as the main home screen.

Personalizing

Selecting the Home Screen Mode

You can change the home screen mode by displaying all apps on the home screen or in the app list, or use a simple home screen layout.

1. Touch and hold an empty place on the home screen and touch > at the bottom right, and then select **Home screen settings**.
2. Touch **Home screen mode** and choose the home screen mode you like.
   - **Standard mode:** All your apps are put on the home screen. Swipe left or right on the home screen to find them.
   - **Drawer mode:** You can swipe up on the home screen to open the app list and find all your apps.
   - **Simple mode:** This mode adopts a simple home screen layout with larger icons and font size for easy navigation. You can swipe up on the home screen to open the app list and find all your apps.
3. Touch **SWITCH**.

NOTE:

To organize apps quickly on the home screen, see *Organizing Apps*.

Setting the Navigation Style

You can set the navigation style as virtual navigation or gesture navigation.

Use Virtual Navigation

To enable virtual navigation:

1. Open **Settings** and touch **Features > System navigation**.
2. Select **Virtual navigation**.

NOTE:

Touch beside **Virtual navigation** to change the navigation key layout, turn on or off the concealable navigation bar, or set whether to activate the Google Assistant by touching and holding . To hide the navigation bar, switch off **Always show navigation bar** and touch on the navigation bar. To display the navigation bar again, swipe up from the bottom of the screen.

To use virtual navigation:

- Touch (the **Home** key) to return to the home screen from any application or screen.
- Touch and hold to use the Google Assistant.
- Touch (the **Back** key) to go to the previous screen.
- Touch (the **Recent apps** key) to see recently used apps.
- Touch twice to switch to the most recent application.

Use Gesture Navigation

To enable gesture navigation:

1. Open **Settings** and touch **Features > System navigation**.
2. Select **Gestures**.

NOTE:

Touch beside **Gestures** to set whether you can open the Google Assistant when using gesture navigation, enable the avoid mis-operation option, display or hide the bottom indicator, and adjust the back sensitivity of screen edges for gesture navigation.

To use gesture navigation:

- Swipe up from the bottom of your screen to return to the home screen from any application or screen.
- Swipe up from the bottom of your screen to the middle and hold to see recently used apps.
- Swipe left or right along the bottom of your screen to switch among recently used apps.
- Swipe inside from the left or right edge of your screen to go to the previous screen.
- Swipe up from the bottom left or bottom right of your screen to activate the Google Assistant.

Changing the System Language

1. Open **Settings** and touch **System > Languages > System languages**. The first language in the list is the default system language.
2. Touch **Add a language** and then the language you need. Select the regional variant of the language if prompted.
3. Touch and hold a language and move it to the top to switch to that language.

NOTE:

To remove languages from the list, touch ⋮ **> Remove** and select the languages you want to delete.

Switching to Vibration or Silent Mode

You can set the phone to vibration or silent mode by using one of the following methods.

- Press the **Volume** key up or down and then touch the icon below the slider to switch the phone to vibration or silent mode or turn on the sound.
- Swipe down from the status bar to open the notification panel and drag the panel downwards. Touch **Ring**, **Vibrate**, or **Silent** to switch the phone to vibration or silent mode or turn on the sound.
- Open **Settings** and touch **Sound and vibration**, and then select **Vibrate** or **Silent** to switch to vibration or silent mode.

Using Do Not Disturb Mode

You can silence your phone with Do Not Disturb mode and set an automatic schedule for Do Not Disturb mode.

Turn On or Off Do Not Disturb Mode

1. Open **Settings** and touch **Sound and vibration > Do Not Disturb**.
2. Switch **Turn on now** on or off.

Set the Exceptions for Do Not Disturb Mode

1. Open **Settings** and touch **Sound and vibration > Do Not Disturb**.
2. Select the following options and choose what to allow.
   - **Allow messages from:** Allow messages from anyone, contacts, or starred contacts, or block all message notifications.
   - **Allow calls from:** Allow calls from anyone, contacts, or starred contacts, or block all call notifications.
   - **Repeat callers:** Allow the phone to ring if the same person calls repeatedly within a 15 minutes period.

Set an Automatic Schedule

You can set automatic schedules to activate Do Not Disturb mode for specific times.

1. Open **Settings** and touch **Sound and vibration > Do Not Disturb**.

2. Touch the switch next to an existing schedule to turn it on or off, or touch the schedule to customize it.

   - or -

   Touch **Add time period** to create your own schedules.

Choosing Your Wallpaper

You can set the wallpaper for the home screen or lock screen.

1. Touch and hold an empty place on the home screen and then touch **Wallpaper**.
2. Select a preset wallpaper, or touch at the top to select a picture and pan and zoom on it to select the area for the wallpaper.
3. Touch **SET AS** and choose where the wallpaper should be used.

NOTE:

Alternatively, you can open **Settings** and touch **Theme and personalization > Wallpaper** to set the wallpaper.

Changing the Theme

1. Open **Settings** and touch **Theme and personalization > Themes**.
2. Select the theme you like and touch **APPLY**.

Setting Screen Refresh Rate

A higher screen refresh rate will help deliver a smoother visual experience, which may consume more battery power. Some apps may have compatibility issues with high refresh rate, so these apps will always run at the refresh rate of 60 Hz.

1. Open **Settings** and touch **Display > Screen Refresh Rate**.
2. Select **Auto**, **60 Hz**, **90 Hz**, or **120 Hz** as you need.

Using Dark Mode

When Dark mode is enabled, your phone will turn the screen to dark with white text on a black background, relieving eye irritation caused by screen glare at night.

1. Open **Settings** and touch **Display > Dark mode**.
2. Switch on **Turn on now** to enable Dark mode.

   - or -

   If you want to set a schedule for Dark mode to turn on/off automatically, touch **Turn on automatically** to enable automatic Dark mode and set the start and end time.

NOTE:

Not all apps support Dark mode.

Using Read Mode

When Read mode is enabled, your phone will automatically adjust screen colour, which makes it easier to look at your screen

or read on the phone. You can add apps to this mode.

To enable Read mode for the entire phone:

1. Open **Settings** and touch **Display > Read mode**.
2. Switch on **For entire device**.

To enable Read mode for certain apps:

1. Open **Settings** and touch **Display > Read mode**.
2. Switch on **Custom apps** and ensure that **For entire device** is turned off.
3. Touch **Add apps to this mode**.
4. Select the apps you want to use in Read mode and touch **ADD**.

Using Night Light

You can enable Night Light to tint the screen amber and reduce the intensity of bright colours for eye protection, or set a schedule when Night Light will be turned on.

1. Open **Settings** and touch **Display > Night Light**.
2. Switch on **Turn on now** to enable Night Light.

   - or -

   If you want to set a schedule for Night Light to turn on/off automatically, touch **Turn on automatically** to enable automatic Night Light and set the start and end time.
3. Drag the sliders below **Intensity of filter** to adjust the eye protection effect when Night Light is on.

Setting the Top Area

You can set the top area style for all apps or a specific app.

To set the global top area style:

1. Open **Settings** and touch **Display > Top area settings**.
2. Select **Notchless display** or **Hide status bar**.

To set the top area style for a specific app:

1. Open **Settings** and touch **Display > Top area settings**.
2. Turn on the switch beside **Custom apps** and then touch **Custom apps**.
3. Select an app and choose **Notchless display**, **Hide status bar** or **Follow global**.

Enabling Full-Screen Display

If an app cannot automatically adapt to display in full screen, you can switch on the full-screen display option to make it fit the screen.

Enabling full-screen display may cause the apps to be stretched improperly and some UI elements of the apps may disappear.

To make an app adapt to display in full screen manually:

1. Open **Settings** and touch **Display > Full screen display**.
2. Turn on the switch beside the app you need.

Using the Phone Storage as the Extended RAM

The phone's Random Access Memory (RAM) is used to handle all active tasks and apps. You can set part of the phone storage as the extended RAM when your phone storage is sufficient, and the phone will run more smoothly.

1. Open **Settings** and touch **About phone > RAM capacity**.
2. Switch on **Extended RAM**.
3. Select the extended RAM capacity.
4. Touch **RESTART NOW**. The changed settings will take effect after the phone is restarted.

Knowing the Basics

Phone Status Icons

The status bar at the top of the home screen provides phone and service status icons on the right side. Below are some of the icons you may see.

3G	3G connected		No signal
4G	4G connected		Signal strength
	Vibration on		Mobile data in use
	Silent mode on		Aeroplane mode
	Do Not Disturb mode on		Connected to a Wi-Fi® network
20	Battery low		Speaker on
100	Battery full		Phone microphone off
70	Battery charging		Location service active
	Wired headset connected		Alarm set
	NFC on		

Notification Icons

The status bar at the top of the home screen provides notification icons on the left. Below are some of the icons you may see.

	New message(s) from the Messages app		New Wi-Fi network detected
	Missed call		microSDXC card mounted
	Call in progress		USB connected
	Call on hold		Song playing (with the YT Music app)

Using Quick Settings

The Quick Settings make it convenient to view or change the most common settings for your phone.

Swipe down from the status bar and drag the notification panel downwards to open the Quick Settings panel.

To turn on or off settings quickly:

1. Open the Quick Settings panel.
2. To turn on or off a setting, touch its tile. Touch and hold certain tiles to access more setting options. For example, touch and hold the Wi-Fi tile to open Wi-Fi settings.

To customize the Quick Settings panel:

You can add, remove or rearrange the tiles on the Quick Settings panel.

1. Open the Quick Settings panel.
2. Touch ✎ at the top and do one of the following.
   - Touch and hold a tile and drag it to the position you want.
   - Touch and hold a tile and drag it to the section below to hide it.
   - In the **Hold and drag to add shortcuts** section, drag a tile up to show it in the Quick Settings panel.

Using App Shortcuts

The app shortcuts feature allows you to quickly access common app functions from the home screen and the app list screen.

NOTE:

Not all apps support the app shortcuts feature.

1. Touch and hold an app on the home screen.
2. From the displayed menu, touch the function you want to use in the app.

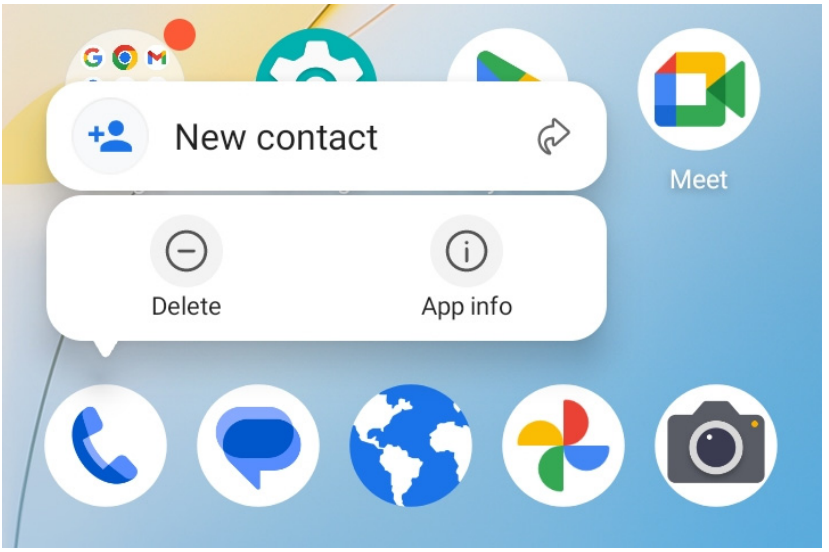

NOTE:

You can also touch and hold a function with the icon next to it, and drag it to a home screen panel to create a shortcut of the function.

Notification Dots

Some apps will display a dot when they have notifications. Touch and hold an app with a dot on the home screen to preview its notifications.

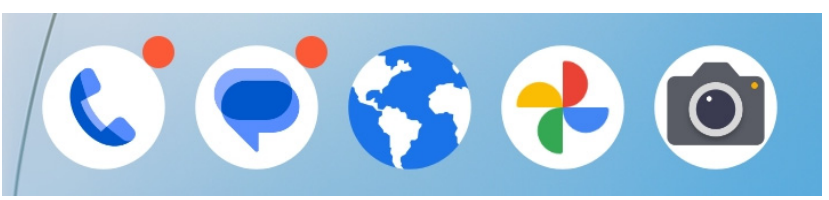

To turn on/off notification dots for all apps:

1. Open **Settings** and touch **Notification & status bar > Home screen badge app icon**.

2. Touch the switch beside **Home screen badge app icon** to turn it on or off.

To turn on/off notification dots for specific apps:

1. Open **Settings** and touch **Notification & status bar > Home screen badge app icon**.
2. Turn on the switch beside **Home screen badge app icon**.
3. Open **Settings** and touch **Apps > See all [number] apps**.
4. Touch the app you want to customize.
5. Touch **Notifications** and touch the **Allow notification dot** switch.

NOTE:

You can choose to show or hide the notification number in the dot. Just open **Settings** and touch **Notification & status bar > Home screen badge app icon > Show badge as**, and then select **Number** or **Full stop**.

Switching Apps

1. Open the recent apps list. The apps you've used recently are displayed in a series of cards. Swipe left and right to see all the cards.

   NOTE:

   To view how to see recently used apps in different navigation styles, see *Setting the Navigation Style*.

2. Touch a card to open that app.

NOTE:

You can swipe a card up to remove it from the screen, which will free up running memory on the phone.

Organizing Apps

You can move or align several apps quickly on the home screen.

To move several apps to another home screen panel quickly:

1. Touch and hold an empty place on the home screen.
2. Find and tick the apps you want to move, and then the home screen thumbnails are shown at the bottom.
3. Touch and hold any one of the apps and drag the apps to another home screen thumbnail. The apps will be moved to that home screen panel.

To align the apps on a home screen panel automatically:

1. Touch and hold an empty place on the home screen.
2. Swipe left or right to select the home screen panel you want to organize.
3. Touch **Align with top** or **Align with bottom** to align all the apps on the home screen panel.

Using the Live Island

You can view live activities such as battery status, earbuds connection, phone calls, voice recording, and countdown timer on the Live Island at the top of the screen. If there are several live activities at the same time, you can swipe left or right on the Live

Island to view them.

To enable this feature, open **Settings** and touch **SyncMind > Live Island**, and then turn on the switch.

Security

Protecting Your Phone With Screen Locks

You can protect your phone by creating a screen lock. When it is enabled, you need to swipe up on the screen, draw a pattern or enter a numeric PIN or password to unlock the phone's screen and keys.

1. Open **Settings** and touch **Security and privacy > Device unlock > Screen lock**.
2. Touch **None**, **Swipe**, **Pattern**, **PIN** or **Complex password**.
   - Touch **None** to disable the screen lock.
   - Touch **Swipe** to enable screen lock and allow unlocking with a "swipe" gesture. You can unlock the screen by touching the display and sliding up.
   - Touch **Pattern** to create a pattern that you must draw to unlock the screen.
   - Touch **PIN** or **Complex password** to set a numeric PIN or a password that you must enter to unlock the screen.

CAUTION:

Remember the pattern, PIN or password you set. Otherwise, you will have to contact the customer service to reflash the phone software to use your phone, and all data in your phone will be erased.

Using Your Fingerprint

With the fingerprint sensor on the **Power** key of your phone, you can register up to 5 fingerprints and use them to unlock the phone, access Private Space and apps locked by Private Space, or open bound apps when the screen is off or locked.

NOTES:

- The fingerprint feature is usable only when a screen lock (**Pattern**, **PIN**, or **Complex password**) is enabled. When the screen lock is reset to **None** or **Swipe**, all registered fingerprints are erased.
- If you restart your phone, you need to enter the screen lock pattern, PIN or password you set to unlock the screen for the first time.

Register a Fingerprint

1. Open **Settings** and touch **Security and privacy > Device unlock > Face and fingerprint unlock**.
2. Enter the screen lock pattern, PIN or password you set. If you haven't set a screen lock, follow the prompts to set it.
3. Touch **Fingerprint**.
4. Read the disclaimer for fingerprint recognition and touch **DONE**.
5. Touch **REGISTER** or **Add fingerprint**.
6. Watch the demo video and touch **START ENROLL**.
7. Follow the prompts to record the center and the edges of a finger.

8. Touch **OK**.

NOTE:

Touch an existing fingerprint record to rename or delete it.

Set Fingerprint Functions

1. Open **Settings** and touch **Security and privacy > Device unlock > Face and fingerprint unlock**.
2. Enter the screen lock pattern, PIN or password you set.
3. Touch **Fingerprint** and you can set the following options.
   - **Unlock device:** Unlock the phone with a registered fingerprint when the screen is off or locked.
   - **Unlock method:** Select to wake up and unlock the phone by touching or pressing the **Power** key.
   - **Access and control apps:** When this feature is enabled, you can open apps locked by Private Space with a registered fingerprint. See *Private Space*.
   - **Access Private Space:** When this feature is enabled, you can access Private Space with a registered fingerprint. See *Private Space*.
   - **Simple touch:** When the screen is off or locked, you can quickly open a selected app with a registered fingerprint. Each registered fingerprint can be assigned to a different app.

Using Face Recognition

You can use face recognition to unlock the screen, access Private Space, or open the apps locked by Private Space.

To improve security of your phone, a high-level security option of face recognition is enabled by default (which means that if the screen lock pattern, PIN or password you set is not used for 24 hours, you will need to enter the pattern, PIN or password for authentication). You can go to the security settings of face recognition, and change the security level to normal (which means that you will need to enter the screen lock pattern, PIN or password every 72 hours), and this may lower the phone security.

NOTES:

- The security strength of face recognition is lower than that of PIN, password, pattern or fingerprint.
- If you restart your phone, you need to enter the screen lock pattern, PIN or password you set to unlock the screen for the first time.

Create a Face

1. Open **Settings** and touch **Security and privacy > Device unlock > Face and fingerprint unlock**.
2. Enter the screen lock pattern, PIN or password you set. If you have not set a screen lock, choose one backup screen lock method to set the screen lock pattern, PIN or password.
3. Touch **Face Unlock**.
4. Read the disclaimer for face recognition and touch **DONE**.
5. Tick or untick **Turn on Raise to wake to improve user experience of face unlock**. If this option is enabled, your phone will turn on the screen and recognize your face to unlock the screen automatically each time you raise your phone and hold it to your face.

6. Touch **CREATE NOW** and follow the prompts to register your face.

Use Face Recognition to Unlock the Screen

After creating your face, you can unlock the screen with face recognition.

1. Press the **Power** key to turn on the screen display if the screen is off.

   NOTE:

   You can also pick up your phone to turn on the screen. To enable this feature, open **Settings** and touch **Features > Gesture & motion** and switch on **Raise to wake**.

2. Put your face in front of the screen. If the face recognition fails, touch to try again.
3. Depending on your setting, you may need to swipe up on the screen to unlock the phone.

Set Face Recognition Options

You can set what face recognition can do on your phone.

1. Open **Settings** and touch **Security and privacy > Device unlock > Face and fingerprint unlock**.
2. Enter the screen lock pattern, PIN or password you set.
3. Touch **Face Unlock** and you can set the following options.
   - **Unlock device:** Select how the screen is unlocked with your face.

- **Access and control apps:** If this option is enabled, you can use face recognition to open the apps locked by Private Space. See *Private Space*.
- **Access Private Space:** If this option is enabled, you can use face recognition to access Private Space.
- **Do not recognize face when eyes are closed:** If this option is enabled, you cannot use face recognition to unlock the phone when you close your eyes.
- **Screen brightness compensation:** If this option is enabled, the phone will increase screen brightness automatically in a dim light to help verify your face.
- **Delete facial data:** Delete your recorded face data.
- **Security settings:** Change the security level to high or normal. The high security level is set by default.

Protecting Your Phone With App Pinning

You can pin an app's screen to keep it in view until you unpin it. This feature can be used, for example, to let a trusted friend play a specific game. Before using app pinning, you need to set up a screen lock. See *Protecting Your Phone With Screen Locks*.

NOTE:

When an app is pinned, the pinned app may open other apps and your personal data may be accessible.

Pin an App

1. Open the recent apps list. If the app you want to keep in view is not in recent apps, open it first.
2. Swipe left or right to find the app card. Then touch ⋮ at the top of the card and select **Pin > OK**.

Unpin the App

1. To unpin the app and return to normal use, touch and hold both ◁ and ☐ for virtual navigation; swipe up from the bottom of the screen and hold for a while for gesture navigation.
2. Swipe up on the lock screen and draw the pattern or enter the PIN/password. You can also unlock the screen with your fingerprint or face if you have registered it on the phone.

Connecting to Networks

Connecting to Mobile Networks

Manage the nano-SIM Cards

When two nano-SIM cards are installed, you can turn off one of them, or choose the default card for calling, messaging and data.

To turn on or off a card:

1. Open **Settings** and touch **Mobile network > SIM cards**.
2. Touch the on/off switch next to a card at the top.

NOTE:

You can touch to edit the card name.

To set the default card for calling, messaging and data connection:

1. Open **Settings** and touch **Mobile network > SIM cards**.
2. Below **Default for calls & SMS** and **Default SIM for cellular data**, select a card as the default.

NOTES:

- When two nano-SIM cards are installed, switch on **Dual sim smart switch** if you want to use the other card for mobile data when the network status of the card you select for mobile data is poor.
- When two nano-SIM cards are installed, you can allow the non-data SIM card to temporarily use mobile data as it is connected to a VoLTE call. Switch on **Connect to network**

during calls on the secondary SIM to enable this feature. VoLTE support depends on your mobile service provider.

Control Mobile Data Use

1. Open **Settings** and touch **Mobile network > Mobile data**.
2. Touch the **Mobile data** switch to enable or disable mobile data use.

Select Preferred Network Type

1. Open **Settings** and touch **Mobile network > Mobile data**.
2. Below the nano-SIM card name, touch **Preferred network type** and select the type of network you prefer the phone to connect to.

Set Access Point Names

To connect to the Internet, you can use the default Access Point Names (APN). And if you want to add a new APN, please contact the service provider to get the necessary information.

1. Open **Settings** and touch **Mobile network > Mobile data**.
2. Below the nano-SIM card name, touch **Access point names** and then touch +.
3. Touch each item to enter the information you get from your service provider.
4. Touch ⋮ **> Save** to complete.

NOTE:

To set the APN to default settings, touch ⋮ **> Reset to default**.

Connecting to Wi-Fi

Wi-Fi is a wireless networking technology that can provide Internet access at distances of up to 100 meters, depending on the Wi-Fi router and your surroundings.

To turn Wi-Fi on and connect to a Wi-Fi network:

1. Open **Settings** and touch **Wi-Fi**.
2. Slide the **Use Wi-Fi** switch to the on position to turn on Wi-Fi.
3. Touch a Wi-Fi network name to connect to it.
4. If the network is secured, enter the password and touch **CONNECT**.

NOTES:

- If you have a QR code of the Wi-Fi network, touch at the top right to scan the code and connect.
- Your phone supports 2.4 GHz and 5 GHz Wi-Fi.
- Your phone automatically connects to previously used Wi-Fi networks when they are in range.

Connecting to Devices

Connecting to Bluetooth Devices

Bluetooth is a short-range wireless communication technology. Phones or other devices with Bluetooth capabilities can exchange information wirelessly within a distance of a few meters. The Bluetooth devices must be paired before the communication is performed.

1. Open **Settings** and touch **Bluetooth**.
2. Switch on **Use Bluetooth**. Your phone automatically scans for and displays the IDs of all available Bluetooth devices in range.
3. Touch the device you want to pair with.
4. If necessary, confirm that the Bluetooth passkeys are the same between the two devices and touch **PAIR**. Alternatively, enter a Bluetooth passkey and touch **PAIR**.

   Pairing is successfully completed when the other device accepts the connection or the same passkey is entered.

NOTE:

The Bluetooth passkey may be fixed for certain devices, such as headsets and hands-free car kits. You can try entering 0000 or 1234 (the most common passkeys), or refer to the documents for that device.

Exchanging Data via NFC

Near Field Communication (NFC) allows your phone to make contactless payments with NFC-enabled terminals when they touch each other or in close proximity.

Depending on the applications that you have installed on your phone, you might be able to use your phone as a transit pass or as an access pass. To use this feature, tap the back of your phone against an NFC-enabled access point, subject to applicable terms and conditions from the particular vendor.

To turn on and use NFC:

1. Open **Settings** and touch **Connected devices**.
2. Slide the **NFC** switch to the on position.
3. If you want to use NFC for contactless payments, touch **Contactless payments** to select the payment app you have installed that supports NFC.

Connecting to Your Computer via USB

You can connect your phone to a computer with a USB cable and transfer music, pictures, and other files in both directions. Your phone stores these files in the phone storage or on a removable microSDXC card.

If you are using USB tethering, you must turn that off before you can use USB to transfer files between your phone and computer.

Connect Your Phone to a Computer via USB

1. Connect your phone to the computer with a USB cable.

2. Open the notification panel and touch **USB** ( ) to open the **Use USB for** options menu.
3. Choose one of the following options.
   - **Charge only:** Charge your phone via USB.
   - **Media device MTP / Android Auto:** Transfer files on Windows® PC or Mac®.
   - **Camera PTP:** Transfer photos or files if MTP is not supported by your computer.

Disconnect Your Phone From the Computer

To disconnect the phone from the computer, simply unplug the USB cable when you're finished.

Using USB On-The-Go (OTG)

Your phone supports USB On-The-Go. You can connect the phone and a USB peripheral device (such as a USB flash drive, a USB mouse, or a USB keyboard) with an OTG adapter.

For example, when you connect the phone with a USB flash drive, you can browse the files on the flash drive; connect the phone with a USB mouse and you can navigate the phone with the mouse.

NOTE:

To safely remove a connected USB storage device (such as a USB flash drive), open **Settings**, touch **Storage** and find the name of the device. Then touch next to it.

Sharing Your Mobile Data Connection Through Tethering

You can use tethering to share your phone's Internet connection with a computer that connects to your phone via USB cable, USB-to-Ethernet adapter or Bluetooth.

NOTE:
You cannot transfer files between your phone and the computer when the phone is USB tethered or Ethernet tethered.

1. Open **Settings** and touch **Mobile network > Hotspot and tethering**.
2. Switch on **USB tethering**, **Bluetooth tethering** or **Ethernet tethering**.
   - For USB tethering, connect your phone to the computer with the supplied USB cable before touching **USB tethering**.
   - For Bluetooth tethering, pair your phone with the computer via Bluetooth and set the computer to obtain its network connection via Bluetooth.
   - For Ethernet tethering, connect a USB-to-Ethernet adapter to your phone and then connect the adapter to the computer with a LAN cable before switching on **Ethernet tethering**. The adapter and the LAN cable are not included in the box and you need to buy them separately.

NOTE:

To stop sharing your data connection, switch off **USB tethering**, **Bluetooth tethering** or **Ethernet tethering**.

Phone Calls

Placing Calls

Place a Call by Dialing

1. From the home screen, touch .
2. Touch to open the dialer and enter the phone number or the contact name with the dialpad. Touch to delete incorrect digits.

   NOTE:
   As you enter the phone number or the contact name, your phone searches for matching information in your contacts. If you see the number and contact you want to call, touch it to place the call immediately.
3. Touch **Call** below the keypad to dial a voice call, or close the dialer if necessary and then touch **Video call** to dial a video call.

NOTE:

To make an international call, touch and hold the **0** key to enter the plus (+) symbol. Next, enter the country code, followed by the city/area code and then the phone number.

NOTE:

Video call support depends on your mobile service provider.

Place a Call From the Call History

The call history is a list of all the calls you've placed, received, or missed. It provides a convenient way to redial a number, return a call, or add a number to your contacts.

1. From the home screen, touch > (in the top search field) > **Call history**.

NOTE:

Touch **Missed** to find all missed calls.

2. Touch beside a listing to call back.

NOTE:

You can also touch the contact icon in front of the listing to get more options for calling and texting.

Call Your Contacts

1. From the home screen, touch > the tab to view all your contacts.
2. Touch a contact and then touch the number to place a voice call, or touch to make a video call with Google Meet.

Answering or Rejecting Calls

Answer a Call

When you receive a phone call, slide up to answer the call.

- or -

If the screen is unlocked, touch **Answer**.

NOTE:

To silence the ringer before answering the call, press either end of the **Volume** key.

Reject a Call

When you receive a phone call, slide down to reject the call. You can also touch **Message** to reject the call and select a preset text message or edit one to send to the caller.

- or -

If the screen is unlocked, touch **Decline** to reject the call. You can also touch the caller number or name, and then touch **Message** to reject the call and select a preset text message or edit one to send to the caller.

Using Options During a Call

During a call, you will see a number of on-screen options. Touch an option to select it.

- Touch to turn on or off the speaker.
- Touch to mute or unmute your microphone.
- Touch to switch to the keypad when you need to enter a code (for example, the PIN for your voicemail or bank account) during the call.
- Touch > to put the call on hold.
- Touch > to make another call separately from the first call, which is put on hold.
- Touch > to merge the separate calls into a single conference call.
- Touch > to put the caller you are speaking to on hold, and switch to the other call that has been put on hold.
- Touch > to switch to video call.
- Touch to end the current call.

NOTE:

Video call support depends on your mobile service provider.

WARNING!

Because of higher volume levels, do not place the phone near your ear during speakerphone use.

Managing Multi-party Calls

When the call waiting and conference call features are available, you can switch between two calls or set up a conference call.

NOTE:

The call waiting and conference call features need network support and may result in additional charges. Please contact your service provider for more information.

Switch Between Current Calls

When you're on a call and another call comes in, your phone screen informs you and displays the caller ID.

To respond to an incoming call while you're on a call:

- Slide up to answer the call. This puts the first caller on hold and answers the second call.
- Touch **Answer and end other call** to answer the call. This ends the first call and answers the second call.
- Slide down to reject the second call.
- Touch **Message** to reject the second call and select a preset text message or edit one to send to the caller.

To switch between two calls:

Touch > .

Set Up a Conference Call

With this feature, you can talk to multiple people at the same time.

1. Place the first call.
2. Once you have established the connection, answer an incoming call or touch ⋮ > and dial the second number. This puts the first caller on hold.
3. When you're connected to the second party, touch ⋮ > .
4. If you need to add more parties, have them call you or touch ⋮ > to dial the number, and touch ⋮ > to merge the calls one by one.

   NOTE:

   The number of calls you can merge depends on your network. Contact your mobile service provider for more information.

If one of the people you called hangs up during the call, you and the remaining callers stay connected. If you initiated the call and are the first to hang up, all callers are disconnected.

To end the conference call, touch .

Contacts

You can add contacts on your phone and synchronize them with the contacts in your Google account.

To see your contacts, touch **Google** (folder) **> Contacts** from the home screen.

Adding a New Contact

1. Open **Contacts**.
2. Touch + to add a new contact.
3. Enter the contact name, phone numbers, email addresses, and other information. Touch **More fields** if necessary.
4. Touch **Save**.

Importing and Exporting Contacts

You can import contacts from your nano-SIM card, the phone storage or an installed microSDXC card, or export contacts to the phone storage or microSDXC card. This is especially useful when you need to transfer contacts between different devices.

Import Contacts From the nano-SIM Card

1. Open **Contacts**.
2. Touch **> Manage SIM**.

3. If two nano-SIM cards are installed, select a nano-SIM card and touch **OK**.
4. Tick the contacts you need and then touch **Import**.

Import Contacts From the Phone Storage or the microSDXC Card

1. Open **Contacts**.
2. Touch **> Import from file**.
3. Touch and find the vCard file(s) on the phone storage or microSDXC card and touch one to import contacts.

Export Contacts to the Phone Storage or the microSDXC Card

1. Open **Contacts**.
2. Touch **> Export to file**.
3. Touch and select the directory in which the vCard file will be saved.
4. Edit the file name if needed and touch **SAVE** to create the file.

Setting a Ringtone for a Contact

Assign a special ringtone to a contact, so you know who is calling when you hear the ringtone.

1. Open **Contacts**.

2. Touch a contact you want to set a ringtone for and then touch ⋮ **> Set ringtone**.
3. Select a ringtone, music file, or recording you like and touch **OK**.

Setting Call Blocking

The call blocking feature allows you to block calls and messages from certain numbers.

1. Open **Contacts**.
2. Touch **> Blocked numbers**.
3. Touch **Add a number**.
4. Enter a phone number and touch **Block**.

NOTES:

- You can also block calls from unidentified callers by switching on **Unknown** in the Blocked numbers screen.
- To unblock a number, touch ✕ next to the number and touch **Unblock**.

Messages

You can use Messages to exchange text messages (SMS), multimedia messages (MMS), and chat messages.

Sending a Message

1. From the home screen, touch .
2. Touch **Start chat**.
3. Add recipients by one of the following ways.
   - Manually enter the recipient's number or contact name. If the phone presents a few suggestions, touch the one you want to add.
   - Select a recipient from your contact list.
   - To add more recipients for a group conversation, touch to choose the recipients and then touch **Next**. You can edit the group name if necessary.
4. If two nano-SIM cards are available, you can touch or and choose the card for sending this message.
5. If you want to send a multimedia message, touch to select existing photos/videos or shoot new ones and add them to the message, touch to share contacts or add location or files, or touch and hold to add a voice recording.

6. Touch the text box and enter the message text.
7. Touch .

NOTES:

- If you add two or more recipients, the message may be sent as a group MMS where everyone can reply and see each other's messages. For group message setting, touch **> Messages settings > Advanced > Group messaging** from the Messages screen, or touch **> Messages settings > [nano-SIM card name] > Group messaging** if two nano-SIM cards are installed.
- You can also include email addresses as recipients for a multimedia message.
- Do not add any attachment if you want to send a text message. Otherwise you may be charged for a multimedia message.

Message Options

On the Messages screen, touch and hold a conversation and the following options are available.

- Touch to pin the conversation to the top of your message list, so you can find it quickly. You can pin up to 3 conversations. Touch to unpin the conversation.

- Touch to archive the conversation. You can touch **> Archived** from the Messages screen to find all archived messages.
- Touch **> Delete** to delete the conversation.
- Touch **> Add contact** to add the new number in the conversation to your contacts.
- Touch **> OK** or **> Block > OK** to block the contact or number in the conversation, and the conversation will be moved to “Spam and blocked.” You can touch **> Spam and blocked** from the Messages screen to find all blocked messages.
- Touch **> Mark as read / Mark as unread** to mark the conversation as read or unread.

NOTE:

You can touch and hold a conversation and touch more to select them, and then choose to archive or delete them.

Camera

Capturing a Photo

1. Open the **Camera** app.
2. Aim the camera at the subject and make any necessary adjustments. Capture (auto camera) mode is used by default.

Number	Function
1	Change the flash setting.
2	Use Google Lens.
3	Change the HDR setting.
4	Zoom control: Touch to switch between 1x zoom and 2x zoom, or touch and hold and then slide left or right to zoom in or out.
5	View pictures and videos you have taken.
6	Touch to capture a picture. Touch and hold to take a series of photos quickly.
7	Switch between the front and back cameras.
8	Swipe left or right to switch among the default Capture (auto camera) mode, Video mode, Portrait mode, and 108M mode. Touch **More** to use other special camera modes: Pro, Panorama, Refocus, Time Lapse, QR code, and Night.
9	Enable beauty mode and customize its options to beautify faces in the picture.
10	Change the camera settings.
11	Use the filter.

WARNING!

Keep a safe distance when using the flash. Do not point the flash towards the eyes of people or animals.

NOTE:
You can spread or pinch on the screen to zoom in or out before taking pictures.

3. Touch the area where you want the camera to focus, or leave the camera to autofocus on the center of the image.

   NOTE:
   In auto camera mode, you can touch and hold on the viewfinder screen to lock the focus and exposure, and then drag up or down to adjust the exposure.

4. Lightly touch .

Recording a Video

1. Open the **Camera** app.
2. Touch **Video**.
3. Aim the camera at the subject and make any necessary adjustments. You can touch any area on the screen that you want the camcorder to focus on before and during recording.
4. Touch to start recording. You can touch or to pause or resume recording, or touch to save the frame as a photo.
5. Touch to stop recording.

NOTES:

- You can touch and hold on the viewfinder screen to lock the focus and exposure, and then drag up or down to adjust the exposure.
- You can spread or pinch on the screen to zoom in or out before and during recording.
- You can record a silent video by turning off the phone microphone. Just touch at the top and switch off **Microphone switch** before recording.

Using AI Scene Recognition

AI scene recognition can automatically adjust the colour and lighting settings to match the scene or subject. For example, if you are taking a picture of flowers, it will choose the best colour for flowers and the picture will be more vivid.

1. Open the **Camera** app.
2. Touch at the top to open the camera settings, and switch on **AI scene recognition**.
3. Aim the camera at the subject. A scene icon will appear depending on the subject detected.
4. Touch to take the photo.

NOTE:

AI scene recognition is only available in auto camera mode.

Using Portrait Mode

You can use Portrait mode to focus on the face in the viewfinder screen with a depth effect and blur backgrounds. You can also take selfies in Portrait mode.

1. Open the **Camera** app.
2. Touch **Portrait**.
3. Aim the camera at the face and you can make the following adjustments.
   - Touch and drag the slider to adjust the depth effect.

     If this feature is turned off, touch and touch **close** to enable it.
   - Touch to enable beauty mode and customize its options to beautify faces in the picture.
4. Touch to take the photo.

Using Pro Mode

You can use Pro mode to adjust more camera options for your photo such as ISO, white balance, exposure, etc.

1. Open the **Camera** app.
2. Touch **More > Pro**.
3. Aim the camera at the subject and you can make the following adjustments.

- When you touch the viewfinder screen, a focus and exposure circle (half yellow half white) will appear. You can drag the yellow circle to any area on the screen that you want to focus on, or drag the white circle to any area on the screen where you want the camera to meter exposure so as to adjust the photo brightness.
- Touch the camera options at the bottom to adjust overall exposure, shutter speed, focus, ISO, white balance, contrast and saturation.
- Touch at the top to set metering mode.

4. Touch to take the photo.

Using Other Camera Modes

Your camera app offers other powerful and interesting camera modes. Touch **More** in the viewfinder screen to find them all.

- **108M:** The picture resolution is set to 108M in this mode, so you can take high-quality pictures.
- **Panorama:** Capture panoramic photos either horizontally or vertically.
- **Refocus:** Take a photo with the subject in focus and the background blurred. You can adjust the slider to change the shutter aperture.
- **Time Lapse:** Record time lapse videos with the back camera. You can set the time interval between each frame.

- **Qr code:** Read the QR code in the viewfinder screen. Or touch at the top to open a picture and scan the QR code in it.
- **Night:** Capture pictures in low-light environment.

Photos

Opening Photos

From the home screen, touch **Photos**. You'll see all the photos and videos on your phone and, if you have signed into your Google account, anything else backed up to your Google Photos library.

Sharing Your Photos or Videos

1. Open **Photos**.
2. Touch and hold a photo or video to select it.
3. Touch more items that you want to share.
4. Touch and select how you want to share the items.

Deleting Unwanted Photos or Videos

1. Open **Photos**.
2. Touch and hold a photo or video to select it.
3. Touch more items that you want to move to bin.
4. Touch **> Move to Bin**.

Restoring a Photo or Video

1. Open **Photos**.
2. Touch ☰ **> Bin**.
3. Touch and hold the photo or video you want to restore and touch **Restore > Restore**.

Voice Recorder

Voice Recorder enables you to record and listen to voice memos.

Recording a Voice Memo

1. Open **Voice Recorder**.
2. Touch ⋮ **> Format settings** to select the audio format of the recording.
3. Touch to start recording. During recording, you can do the following:
   - Touch or to pause or continue the recording.
   - Touch or to add a time tag or photo tag to the recording.
   - Touch an added time tag to attach a picture or add text.
4. Touch **DONE** to stop recording.
5. Edit the file name and touch **SAVE** to save the recording.

If you don't want to save the memo after recording it, touch **DELETE > DELETE** to delete it.

Playing a Voice Memo

1. Open **Voice Recorder** to view all recordings.
2. Touch the title of a memo to play it. During the playing, you can do the following:
   - Touch or to pause or continue the playing.
   - Touch to skip the silent parts of the recording.
   - Touch 1.0x to change the playback speed.
   - Touch **View tag** to view all tags.
   - Touch or to add a time tag or photo tag, or touch and hold a tag to delete it.
   - Touch or to play the recording through the phone earpiece or speaker.

Trimming a Voice Memo

1. While playing a recording, touch to open the editing screen.
2. Drag the arrows on the progress bar to select the portion you want to keep. You can touch to preview the trimmed part.
3. Touch **TRIM**.
4. Edit the name of the trimmed recording and touch **SAVE**.

Phone Switch

You can use Phone Switch to easily transfer data such as contacts, messages, pictures, audio, videos, etc. from your old Android phone to the new one. You need to install Phone Switch on both phones first.

NOTE:

For detailed help information, open **Phone Switch** and touch ⋮ **> Help**.

To install the Phone Switch app on another phone:

1. Open **Phone Switch**.
2. Touch **Share Phone Switch**.
3. Turn on Bluetooth on another phone.
4. Touch **SHARE** and then touch the phone name in the list to send the app installation file to that phone.
5. Install the Phone Switch app on that phone after the installation file has been received.

To transfer data from the old phone to the new one:

1. Turn off the mobile data connection and enable the location service on both phones.
2. Open the Phone Switch app on the new phone and touch **NEW**. A QR code will be displayed on the screen.

3. Open the Phone Switch app on the old phone and touch **OLD**.
4. Use the old phone to scan the QR code on the new phone's screen to connect the two phones via Wi-Fi.

NOTE:

If the connection fails, touch **Unable to connect?** and follow the on-screen instructions to try again.

5. Tick the data you need to transfer on the old phone and touch **START CHANGING**.
6. Wait until the data has been transferred and imported to the new phone. Touch **DONE**.

Private Space

Private Space allows you to encrypt your files, lock your apps and manage your account passwords. To access Private Space, you need to draw a pattern, enter a PIN, or use your registered fingerprint or face.

Opening Private Space for the First Time

When you use Private Space for the first time, you need to set a new lock pattern or PIN for Private Space.

1. Open **Private Space**.
2. Touch **SETUP PASSWORD**.
3. Draw and redraw a pattern that you must draw to access Private Space, or touch **Or set PIN** to set a PIN that you must enter to access Private Space.

   NOTE:

   This pattern or PIN is for accessing Private Space only and can be different from the pattern or PIN for screen lock.

4. Select the security question and enter your answer, and then touch **DONE**.

   NOTE:

   If you forget the pattern or PIN you set, you can reset it by entering the answer to the security question.

5. If you have registered a fingerprint in your phone, the phone will prompt you to use your fingerprint to access Private Space. Touch **OK** to confirm.

NOTE:

You can also use face recognition to access Private Space. See *Set Face Recognition Options*.

Encrypting Pictures/Videos/Files

After the pictures, videos, and files are encrypted, they can be accessed only in Private Space.

1. Open **Private Space**.
2. Enter the lock pattern or PIN you set or use your registered fingerprint or face.
3. Touch **Pictures**, **Videos** or **Files**.
4. Touch + to add pictures, videos, or files from your phone storage. You can also take pictures or videos and encrypt them directly.

   The added items will be moved into Private Space.

NOTE:

To decrypt pictures, videos, or files, touch and hold an item and touch more to select them, and then touch **> OK**.

Locking Apps

After an app is locked, you need to enter the lock pattern, PIN or fingerprint you set before using that app. You can also use face recognition to open the locked apps. See *Set Face Recognition Options*.

1. Open **Private Space**.
2. Enter the lock pattern or PIN you set or use your registered fingerprint or face.
3. Touch **App lock**.
4. Turn on the switches beside the apps you want to lock.

NOTE:

Touch on the App lock screen and touch **App lock** to turn on or off this feature, or touch **Lock mode** to set when the locked apps will be locked again after you open them.

Using Password Book

1. Open **Private Space**.
2. Enter the lock pattern or PIN you set or use your registered fingerprint or face.
3. Touch **Password book**. You can add and manage your account description, user name, password and note in the password book.

Setting Private Space

1. Open **Private Space**.
2. Enter the lock pattern or PIN you set or use your registered fingerprint or face.
3. Touch ⚙ and set the following options.

   ▶ **Security:**

   - **Login type:** To access Private Space and the locked apps, you can select pattern or PIN as the login type.
   - **Security question:** Edit your security question and answer.

     NOTE:

     If you forget the lock pattern or PIN, you can touch **Forgot password** on the screen and enter your answer to reset the pattern or PIN.
   - **Pattern settings:** Set whether the pattern is visible when you draw the lock pattern.
   - **Access Private Space (Fingerprint):** Set whether to use the fingerprint you set to access Private Space.
   - **Access app lock (Fingerprint):** Set whether to use the fingerprint you set to open the locked apps.
   - **Access Private Space (Face verify):** Set whether to use face recognition to access Private Space.
   - **Access app lock (Face verify):** Set whether to use face recognition to open the locked apps.

- **Private Space backup:** Back up Private Space data. If you forget the pattern or PIN of Private Space, you cannot restore the data.
- **Private Space restore:** Restore Private Space data.
- **Backup reminder notification:** Set whether to be notified to back up regularly when Private Space has new data.

Settings

The **Settings** app contains most of the tools for customizing and configuring your phone.

Wi-Fi

Open **Settings** and touch **Wi-Fi**. You can turn Wi-Fi on or off and configure your Wi-Fi connections. See *Connecting to Wi-Fi*.

Bluetooth

Open **Settings** and touch **Bluetooth**. You can turn Bluetooth on or off and configure your Bluetooth connections. See *Connecting to Bluetooth Devices*.

Mobile Network

Aeroplane Mode

Open **Settings** and touch **Mobile network > Aeroplane mode** to turn aeroplane mode on or off. All the phone's radios that transmit voice or data are turned off when aeroplane mode is on.

Data Saver

Open **Settings** and touch **Mobile network > Data Saver > Use Data Saver** to enable or disable Data Saver, which prevents

apps from using data connection in the background. Apps you're currently using can access data, but may do so less frequently when Data Saver is enabled. You can touch **Unrestricted data** to allow some apps to always have data connection access, even when Data Saver is enabled.

Hotspot and Tethering

Open **Settings** and touch **Mobile network > Hotspot and tethering** to share your phone's mobile data connection with PCs or other devices via USB cable, Bluetooth, or USB-to-Ethernet adapter. See *Sharing Your Mobile Data Connection Through Tethering*.

Mobile Data

Open **Settings** and touch **Mobile network > Mobile data** to control mobile data and data roaming, check and manage mobile data use, set network type, and set access point names and other network options. See *Connecting to Mobile Networks*.

NOTE:

The data usage is measured by your phone, and your carrier's data usage accounting may differ.

SIM Cards

Open **Settings** and touch **Mobile network > SIM cards**. Manage your installed nano-SIM cards and set the default nano-SIM card for making calls, messaging and mobile data. See *Manage the nano-SIM Cards*.

Connected Devices

Open **Settings** and touch **Connected devices** to use the following features.

- **NFC:** Turn on or off the NFC feature. See *Exchanging Data via NFC*.
- **Contactless payments:** Manage contactless payment setting for apps using NFC for contactless payments.
- **VPN:** Set up and connect to virtual private networks.
- **Private DNS:** Turn Private DNS on or off, or change its settings. To get information from a website, your phone first asks where the website is. Private DNS is a way to help secure these questions and answers. We recommend keeping Private DNS turned on.
- **Connection preferences:**
  - **Printing:** Use the default printing service or other printer plug-ins installed from the Google Play Store or your printer manufacturer for wireless printing.
  - **Chromebook:** Connect with your Chromebook device.
  - **Quick Share:** Use Bluetooth or Wi-Fi to share files with other devices near your phone. You can share things like photos, videos, documents, and links.
  - **Android Auto:** Connect to your car and use apps on your car screen.

Theme and Personalization

Open **Settings** and touch **Theme and personalization** to set the theme, wallpapers, icon shape and colour, animation speed, colours and shapes of the screen buttons, and font size and weight, or configure lock screen settings.

Home Screen

Open **Settings** and touch **Home screen** to configure the home screen options, such as app icons, home screen mode, home screen layout, Z-Board, etc.

Display

Open **Settings** and touch **Display** to configure the display options, including brightness level, Dark mode, Read mode, Night Light, colour temperature, top area display, full-screen display, screen refresh rate, screen timeout, text and display size, auto-rotate screen, etc.

Notification & Status Bar

Open **Settings** and touch **Notification & status bar** to manage app notifications, status bar options, and advanced notification options.

Sound and Vibration

Open **Settings** and touch **Sound and vibration**. You can adjust different types of volume, toggle sound mode (see *Switching to Vibration or Silent Mode*), set Do Not Disturb options (see *Using Do Not Disturb Mode*), set up phone ringtone, notification tone, and alarm tone, set DTS sound effects, and set other sounds and vibrations.

SyncMind

Open **Settings** and touch **SyncMind > Live Island**. You can view live activities such as battery status, earbuds connection, phone calls, voice recording, and countdown timer on the Live Island at the top of the screen. See *Using the Live Island*.

Features

Open **Settings** and touch **Features**. The following features are available.

- **System navigation:** Set the navigation style as virtual navigation or gesture navigation. See *Setting the Navigation Style*.
- **Record screen:** Set the sound source, video quality, touch interaction, and lock screen options for screen recording.

NOTE:

To record the screen and save it as a video, open the Quick Settings panel and touch **Record screen**, touch / / / to mute the recording or change sound source, and then touch to start recording and or to pause or stop.

- **App duplicator:** Create an app clone so you can sign in to different accounts at the same time.
- **Screen-edge mistouch prevention:** Adjust the width of edge touch area to prevent accidental touches on the screen edges.
- **Mistouch prevention in pocket:** Prevent unintended operations caused by accidental touches on the screen when the phone is placed in your pocket.
- **Gesture & motion:** You can control the phone with special finger gestures or by moving the phone in different ways. Touch the switches to enable each function; touch each function to view how to use it or try it out.

  NOTE:

  The use of phone cover/case may stop certain functions from working.
- **Scheduled power on/off:** Set the day and time when the phone automatically powers on or off. You can also touch the switches on the right to turn the features on or off.

- **Accessibility:** Configure accessibility options and services on your phone including downloaded apps options, display, interaction controls, audio, etc. See *Accessibility*.
- **Wake up Google assistant:** When this feature is enabled, you can wake up the Google Assistant by pressing and holding the **Power** key for about half a second. To power off or restart the phone, you need to press and hold the **Power** key for more than 3 seconds.

Apps

App Info

Open **Settings** and touch **Apps**. View recently opened apps at the top or touch **See all [number] apps** to see all apps installed on your phone and manage them. Touch an app to see its information and configure the available options.

Default Apps

Open **Settings** and touch **Apps > Default apps** to select the default app for web browsing, phone calling, messaging, etc. Touch **Opening links** to set Instant apps options, or touch an installed app to check its supported links and set whether to open the links in the app.

Screen Time

Open **Settings** and touch **Apps > Screen time** to find out how much time you spend on apps and set the total time per day

that you can use an app. When you reach your limit, the app closes and its icon dims.

Unused Apps

Open **Settings** and touch **Apps > Unused apps** to find the apps that haven't been used for some time and delete them to free up space.

App Battery Usage

Open **Settings** and touch **Apps > App battery usage** to set battery optimization options for apps.

Special App Access

Open **Settings** and touch **Apps > Special app access** to set special access options of apps.

Battery

Open **Settings** and touch **Battery** to view the battery level, check the battery information, enable different battery saving modes, check what has been using the battery, manage apps intelligently, or set more options to improve battery life.

Storage

Open **Settings** and touch **Storage** to view the memory information of the internal phone storage and the microSDXC card (if one is installed).

- **Default save location:** When a microSDXC card is installed, you can select **Phone** or **SD card** as the default location for new data.
- **Device storage:** Touch **Internal shared storage** to get a detailed breakdown of space usage by type.
- **Portable storage:** Safely mount, unmount (eject), and format your microSDXC card.

When you connect a USB storage device (such as a USB flash) to your phone with an OTG adapter, you can view its storage status, unmount it, or erase all data on it. See *Using USB On-The-Go (OTG)*.

Location

Open **Settings** and touch **Location** to manage location services, which help your phone and apps determine your location. To use location-related applications, such as finding your location on Google Maps, you must have location services enabled on your phone.

Security and Privacy

Open **Settings** and touch **Security and privacy** to configure options that help keep your phone and data safe and set the privacy options. You need to touch **More security and privacy** to find all options.

- **App security:** Google Play Protect regularly checks your apps and phone for harmful behaviour and warns you about any detected potential harm.
- **Device unlock:**
  - **Screen lock:** Disable the screen lock or enable it with swipe, pattern, PIN, or password. See *Protecting Your Phone With Screen Locks*.

    Touch ⚙ beside **Screen lock** to set its options.
  - **Face and fingerprint unlock:**
    - **Face Unlock:** Use face recognition to unlock the screen, access Private Space, or open the apps locked by Private Space. See *Using Face Recognition*.
    - **Fingerprint:** Set up to 5 fingerprints and enable them to unlock the phone, quickly open bound apps, access Private Space, or open the apps locked by Private Space. See *Using Your Fingerprint*.
- **Account security:** Add a Google account to take the Google security and password checkups.
- **Device finders:** Use Find My Device to locate, lock, or wipe your lost device remotely. The lost device must be signed in to a Google account.
- **System and updates:** Check for security update and Google Play system update, or back up your data with Google One.

- **Privacy:**
  - **Permission manager:** Check which apps have been allowed to access certain permissions. You can also change the app permissions.

    WARNING!

    Changing the app permissions may result in the app not working correctly or as originally intended.
  - **Privacy dashboard:** Check which apps recently used certain permissions.
  - **Ads:** Reset your advertising ID or opt out of ads personalization.
  - **Health Connect:** Manage the health and fitness data on your phone, and control which apps can access it.
  - **Data sharing updates for location:** Review apps that changed the way they may share your location data.
  - **Show clipboard access:** Get a notification when apps access text, images, or other content you've copied.
  - **Show passwords:** Display passwords briefly as you enter them.
  - **Location access:** Manage location services, which help your phone and apps determine your location.
  - **Activity controls:** Choose the activities and information you allow Google to save.
- **Notifications on lock screen:** Choose what notification contents will be shown on the lock screen.

- **Show media on lock screen:** Allow media player stay open on the lock screen to resume playback quickly.
- **App content:** Allow apps to send content to the Android system.
- **Android System Intelligence:** Get suggestions based on the people, apps and content you interact with.
- **Autofill service from Google:** Set the options of Auto-fill with Google. With a single touch, you can fill in passwords, addresses, credit cards, and other information saved to your Google account.
- **Usage and diagnostics:** Help improve your Android device experience by automatically sending your device and app usage data to Google.
- **Device admin apps:** View or deactivate apps you have authorized to be device administrators.
- **Extend Unlock:** Keep your phone unlocked while it's on you, at specific places that you trust, or near your connected devices.
- **SIM lock:**
  - **Lock SIM:** Activate or deactivate the PIN lock to require the PIN before accessing the nano-SIM card.
  - **Change SIM PIN:** Change the PIN used to access the nano-SIM card.

NOTE:

Put all your confidential passwords in a safe place for future use. If you enter the wrong SIM PIN more times than

allowed, your nano-SIM card will be locked and you cannot access the mobile phone network. Contact your operator for a Personal Unblocking Key (PUK) to restore the nano-SIM card.

- **Encryption and credentials:** Check the encryption status of your phone and set the credential storage options.
- **Trust agents:** View or deactivate trust agents.

Safety & Emergency

Open **Settings** and touch **Safety & emergency** to use the following features.

- **Medical information / Emergency contacts:** Edit your medical information and emergency contacts for first responders to read from your lock screen.
- **Emergency SOS:** If this feature is enabled, you can press the **Power** key quickly 5 times or more to start Emergency SOS when you have an emergency and need emergency services. The phone will play a loud sound, call the emergency number, share information with your emergency contacts and record an emergency video automatically according to your settings.
- **Crisis alerts:** Get alerts for natural disasters and public emergencies affecting your area.
- **Emergency Location Service:** If Emergency Location Service (ELS) works in your country and on your mobile network, and you haven't turned off ELS, your phone will automatically send its location to emergency response

partners. If ELS is off, your mobile operator may still send your phone's location during an emergency call.

- **Earthquake alerts:** Enable or disable earthquake alerts. This feature is not supported in all countries.
- **Wireless emergency alerts:** Enable or disable emergency alerts such as AMBER alerts and Extreme threats and set alert preferences.

Passwords and Accounts

Open **Settings** and touch **Passwords and accounts** to manage your passwords, auto-fill, accounts and synchronization.

Digital Wellbeing and Parental Controls

Open **Settings** and touch **Digital Wellbeing and parental controls** to get information about how you spend time on your phone, like how often you unlock it and how long you use each app. You can use that information to improve your digital wellbeing. You can also help your child balance the screen time with the Family Link app.

- **Dashboard:** Check the screen time, number of notifications, and opened times of each app. You can set daily timers for most apps. When the app timer ends, the app is paused for the rest of the day.

- **Bedtime mode:** Schedule changes to help you get ready for sleep, like removing your screen's colours and stopping notifications.
- **Focus mode:** Select distracting apps and turn on focus mode to pause these apps and hide their notifications when you need time to focus.
- **Manage notifications:** Manage notification settings for each app.
- **Do Not Disturb:** Set Do Not Disturb options (see *Using Do Not Disturb Mode*.)
- **Heads Up:** Get a reminder to focus on what's around you if you use your phone while walking.
- **Show icon in the app list:** Display or hide the Digital Wellbeing app in the app list.
- **Parental controls:** Touch **Set up parental controls** to add content restrictions and set other limits for your child with the Family Link app.

Google

Open **Settings** and touch **Google** to manage settings for Google apps and services.

System

System Update

Open **Settings** and touch **System > System update** to check for system updates and install them when they become available.

Languages

Open **Settings** and touch **System > Languages** to configure options related to system language, app language, regional preferences, and speech input and output.

Keyboard

Open **Settings** and touch **System > Keyboard** to configure options related to on-screen and physical keyboards, and input tools.

Date and Time

Open **Settings** and touch **System > Date and time** to set date, time, time zone, and the time format. You can also use network-provided data.

Downloads

Open **Settings** and touch **System > Downloads** to view and manage your downloaded files.

Change Phone

Open **Settings** and touch **System > Change phone**. You can use the Phone Switch app to easily transfer data such as contacts, messages, pictures, audio, videos, etc. from your old Android phone to the new one. See *Phone Switch*.

Backup

Open **Settings** and touch **System > Backup** to manage data backup options. To easily restore or switch phones at any time, you can enable automatic backup to Google cloud storage of important data. You need to sign in to your Google account to use this feature.

Reset Options

Open **Settings** and touch **System > Reset options** to restore preset applications, and reset mobile network settings, Bluetooth and Wi-Fi settings, app preferences, or the phone to factory default status.

About Phone

Open **Settings** and touch **About phone** to view phone status, nano-SIM card status, legal information, and other information. You can also use the phone storage as the extended RAM to make your phone run more smoothly. See *Using the Phone Storage as the Extended RAM*.

Accessibility

You can configure accessibility options and services on your phone including downloaded apps options, display, interaction controls, captions, audio, etc.

Display

Change Display Size and Text

1. Open **Settings** and touch **Features > Accessibility > Text and display**.
2. Touch **Font** to adjust font size and weight, or touch **Display size** to change your preferred display size.

Use High Contrast Text

High contrast can make text easier to read on your phone. This feature changes the text colour to either black or white, depending on the original text colour.

1. Open **Settings** and touch **Features > Accessibility > Text and display**.
2. Switch on **High-contrast text**.

Use Colour Correction

Colour correction and grayscale settings help your phone compensate for colour blindness.

1. Open **Settings** and touch **Features > Accessibility > Colour and motion > Colour correction**.
2. Switch on **Use colour correction**.
3. Choose a correction mode.

NOTE:

You can make a shortcut for colour correction.

Use Colour Inversion

Colour inversion reverses the colour on the screen, and applies to everything including media and images.

1. Open **Settings** and touch **Features > Accessibility > Colour and motion > Colour inversion**.
2. Switch on **Use colour inversion**.

NOTE:

You can make a shortcut for colour inversion.

Use Dark Mode

When Dark mode is enabled, your phone will turn the screen to dark with white text on a black background, relieving eye irritation caused by screen glare at night.

1. Open **Settings** and touch **Features > Accessibility > Colour and motion > Dark mode**.
2. Switch on **Turn on now** to enable Dark mode.

   - or -

If you want to set a schedule for Dark mode to turn on/off automatically, touch **Turn on automatically** to enable automatic Dark mode and set the start and end time.

NOTE:

Not all apps support Dark mode.

Remove Animations

You can reduce animation effects on the screen to help you focus.

1. Open **Settings** and touch **Features > Accessibility > Colour and motion**.
2. Switch on **Remove animations**.

Use Large Mouse Cursor

You can make the mouse pointer bigger when using an external mouse.

1. Open **Settings** and touch **Features > Accessibility > Colour and motion**.
2. Switch on **Large mouse cursor**.

Dim the Screen

You can dim your screen beyond your phone's minimum brightness so it's more comfortable to read.

1. Open **Settings** and touch **Features > Accessibility**.

2. Switch on **Extra dim**.

NOTE:

You can touch **Extra dim** to adjust more options and make a shortcut.

Use Magnification on the Screen

You can magnify the screen and zoom in on a specific area.

To turn on magnification:

1. Open **Settings** and touch **Features > Accessibility > Magnification**.
2. Switch on **Magnification shortcut** and touch **OK**.
3. To change your shortcut, touch **Magnification shortcut** and tick the following options you need.

   - **Tap Accessibility button:** Touch at the side of the screen to use magnification.

     NOTE:

     You can also use the accessibility gesture as the shortcut. Just touch **More options > Use button or gesture** and select **Gesture**.

   - **Hold volume keys:** Press and hold both ends of the **Volume** key to use magnification.
   - **Triple-tap screen:** Quickly touch the screen three times to use magnification. This shortcut may slow down your phone.

4. Touch **SAVE**.

NOTES:

- To make the magnifier follow text as you type, switch on **Magnify typing**.
- To make the magnifier stay on when you switch apps, switch on **Keep on while switching apps**.

To use full screen magnification:

1. Use your magnification shortcut to start magnification.
2. Touch the screen.
3. Drag two fingers to move around the screen, or pinch/spread with two fingers to adjust zoom.
4. To stop magnification, use the shortcut again.

To use full screen magnification temporarily:

1. Use your magnification shortcut to start magnification.
2. Touch and hold on the screen.
3. Drag your finger to move around the screen.
4. Lift your finger to stop magnification.

To use partial screen magnification:

1. Use your magnification shortcut to start magnification. A magnifier window will appear.
2. Drag the edge of the window to move it; pinch/spread with two fingers inside the window to adjust zoom.

3. To stop magnification, use the shortcut again.

NOTE:

Touch / at the corner of the window magnifier to change window size, adjust zoom, or allow diagonal movement of the window. Touch **Done** to save your changes.

To switch between full screen and partial screen:

1. Open **Settings** and touch **Features > Accessibility > Magnification > Magnification type**.
2. Select an option and touch **SAVE**.

NOTE:

If **Switch between full and partial screen** is selected, you can touch > / / to switch from full screen magnification to the window magnifier of different sizes, or touch / at the corner of the window magnifier and select to switch to full screen magnification.

Interaction Controls

Use the Accessibility Menu

The Accessibility Menu provides a large on-screen menu to control your phone. You can lock your phone, control volume and brightness, take screenshots, and more.

To turn on the Accessibility Menu:

1. Open **Settings** and touch **Features > Accessibility > Accessibility Menu**.
2. Switch on **Accessibility Menu shortcut** and follow the on-screen prompts.
3. To change your shortcut, touch **Accessibility Menu shortcut** and tick the options you need.
4. Touch **SAVE**.

NOTE:

To make the Accessibility Menu buttons larger, open **Settings** and touch **Features > Accessibility > Accessibility Menu > Settings**, and then switch on **Large buttons**.

To use the Accessibility Menu:

1. Use your Accessibility Menu shortcut to open the Accessibility Menu.
2. On the menu, choose an option. To find more menu options, go to the next screen or previous screen.
3. To close the menu, use the shortcut again or touch any area outside the Accessibility Menu.

Touch and Hold Delay

You can set the recognition time for touching and holding the screen.

1. Open **Settings** and touch **Features > Accessibility > Screen touch > Touch and hold delay**.
2. Select an option.

Time to Take Action

You can choose how long to show temporary messages that ask you to take action, but are visible only temporarily.

1. Open **Settings** and touch **Features > Accessibility > Screen touch > Time to take action**.
2. Select an option.

NOTE:

Not all apps support this setting.

Auto Click (Dwell Timing)

If you use a mouse with your phone, you can set the cursor to take action automatically when the cursor stops moving for a certain amount of time. This feature can be helpful for users with motor impairments.

1. Open **Settings** and touch **Features > Accessibility > Screen touch > Auto click (dwell timing)**.
2. Select your preferred amount of time.

Use the Power Key to End Call

You can press the **Power** key to end a call, making it faster and easier to hang up.

1. Open **Settings** and touch **Features > Accessibility > Handy features**.
2. Switch on **Power button ends call**.

Rotate the Screen Automatically

If this feature is enabled, the screen automatically rotates when you move your phone between portrait position and landscape position.

1. Open **Settings** and touch **Features > Accessibility > Handy features**.
2. Switch on **Auto-rotate screen**.

Captions

Live Caption

When you play media content on your phone, such as videos or podcasts, Live Caption detects speech on the phone and automatically generates captions.

1. Open **Settings** and touch **Features > Accessibility > Live Caption**.
2. Switch on **Use Live Caption**.

NOTE:

You may need to update your software to use this feature. Touch **Help** to get detailed help information.

Caption Preferences

1. Open **Settings** and touch **Features > Accessibility > Caption preferences**.
2. Switch on **Show captions** to turn on captions.
3. Select an option for configuring the caption settings.

NOTE:

Not all media apps support your caption preferences.

Audio

Audio Description

If this feature is enabled, you'll hear a description of what's happening in a video.

1. Open **Settings** and touch **Features > Accessibility**.
2. Switch on **Audio description**.

NOTE:

This feature only works with videos that provide audio description.

Flash Notifications

To alert you of an incoming notification or alarm, you can set your phone to flash its camera flashlight or screen.

WARNING!

Use flash notifications with caution if you're light sensitive.

1. Open **Settings** and touch **Features > Accessibility > Flash notifications**.
2. Switch on **Camera flash** or **Screen flash**.

NOTES:

- Touch **Screen flash** to choose your desired colour.
- Touch **Preview** to test the flash notification or screen flash setting.

Mono Audio

This setting makes both left and right audio channels get played back simultaneously when playing audio. Enable this feature if you have a hearing impairment or when using a single earbud is more convenient.

1. Open **Settings** and touch **Features > Accessibility > Audio adjustment**.
2. Switch on **Mono audio**.

Adjust the Audio Balance

1. Open **Settings** and touch **Features > Accessibility > Audio adjustment**.
2. Drag the slider left or right below **Audio balance** to adjust the audio balance.

Accessibility Shortcuts

You can use the accessibility button or gesture to quickly access accessibility features.

1. Open **Settings** and touch **Features > Accessibility > Accessibility shortcuts > Accessibility button & gesture**.
2. Touch **Use button or gesture** and select an option below.
   - **Button:** Touch an accessibility button at the side of the screen to access the corresponding accessibility feature.
   - **Gesture:** Swipe up with two fingers from the bottom of the screen to access the accessibility feature.

NOTES:

- You can change the size of accessibility buttons, and set the transparency and fade-out of the buttons.
- You can access accessibility shortcuts from the lock screen by holding both ends of the **Volume** key. To enable this feature, open **Settings > Features > Accessibility > Accessibility shortcuts** and switch on **Shortcut from lock screen**.

Text-to-Speech Output

With this feature, your phone can convert text input and play audio aloud.

1. Open **Settings** and touch **Features > Accessibility > Text-to-speech output**.
2. Choose your preferred speech synthesis engine, language, speech rate, and pitch.

Select to Speak

You can select items on your screen and hear them read or described aloud with Select to Speak.

Turn On Select to Speak

1. Open **Settings** and touch **Features > Accessibility > Select to Speak**.
2. Switch on **Select to Speak shortcut** and follow the on-screen prompts.
3. To change your shortcut, touch **Select to Speak shortcut** and tick the options you need.
4. Touch **SAVE**.

Use Select to Speak

1. Use your Select to Speak shortcut to start this feature.
2. Touch a specific item on the screen; drag your finger across the screen to hear multiple items; touch ▶ to hear everything.

NOTES:

- When the player is open, use the buttons to pause, continue or stop the playing, and skip forward or backward.
- To set more options and get detailed help information, open **Settings** and touch **Features > Accessibility > Select to Speak > Settings**.

Switch Access

Switch Access lets you interact with your phone using one or more external switches or using facial gestures. Switch Access can be helpful if you can't interact directly with your phone.

1. Open **Settings** and touch **Features > Accessibility > Switch Access**.
2. Switch on **Use Switch Access** and follow the setup guide to add a switch.
3. To change your shortcut, touch **Switch Access shortcut** and tick the options you need, and then touch **SAVE**.

NOTE:

To get detailed help information and configure Switch Access settings, open **Settings** and touch **Features > Accessibility > Switch Access > Settings**.

TalkBack

TalkBack provides spoken feedback so that you can use your phone without looking at the screen. This feature can be helpful for people who are blind or have low vision.

When TalkBack is on, items on the screen are outlined with a focus box, and the phone gives audio cues about what is on the screen. Instead of typical touch interactions, you can navigate the phone through TalkBack gestures.

Turn On TalkBack

1. Open **Settings** and touch **Features > Accessibility > TalkBack**.
2. Switch on **Use TalkBack** and follow the on-screen prompts.

- or -

When you first power on your phone after you purchase it or reset it to factory settings, you can turn on TalkBack from the “Hi there” screen.

1. On the “Hi there” screen, touch **Vision settings > TalkBack**.
2. Switch on **Use TalkBack** and follow the on-screen prompts.

NOTE:

You can use the TalkBack shortcut to turn on or off TalkBack. Just open **Settings > Features > Accessibility > TalkBack** and switch on **TalkBack shortcut**. To change your shortcut, touch **TalkBack shortcut** and tick the options you need, and then touch **SAVE**.

Use TalkBack

- To select an item, set the focus on that item by touching it with one finger and then double-tap with one finger to activate that item.
- Swipe right or left with one finger to move between items.
- To scroll up or down on the screen, drag up or down with two fingers.
- To check out and customize all available finger gestures for controlling the screen, open **Settings** and touch **Features > Accessibility > TalkBack > Settings > Customise gestures**.

NOTE:

To get detailed help information, open **Settings** and touch **Features > Accessibility > TalkBack > Settings > Tutorial and help**.

For Your Safety

General Safety

	Don’t make or receive handheld calls while driving. Never text while driving.		Don’t use at gas stations.
	Keep your phone at least 5 mm away from your body while making calls.		Your phone may produce a bright or flashing light.
	Small parts may cause choking.		Don’t dispose of your phone in fire.
	Your phone can produce a loud sound.		To prevent possible hearing damage, do not listen at high volume levels for long periods. Exercise caution when holding your phone near your ear while the loudspeaker is in use.

	Avoid contact with anything magnetic.		Avoid extreme temperatures.
	Keep away from pacemakers and other electronic medical devices.		Avoid contact with liquids. Keep your phone dry.
	Turn off when asked to in hospitals and medical facilities.		To disassemble your phone, contact an authorized service provider or follow the repair instructions.
	Turn off when told to on aircraft and at airports.		Only use compatible accessories.
	Turn off when near explosive materials or liquids.		Don’t rely on your phone as a primary device for emergency communications.
	For pluggable equipment, the socket-outlet shall be installed near the equipment and shall be easily accessible.		

Radio Frequency (RF) Energy

General Statement on RF Energy

Your phone contains a transmitter and a receiver. When it is ON, it receives and transmits RF energy. When you communicate with your phone, the system handling your call controls the power level at which your phone transmits.

Specific Absorption Rate (SAR)

Your mobile device is a radio transmitter and receiver. It is designed not to exceed the limits for exposure to radio waves recommended by international guidelines. These guidelines were developed by the independent scientific organization ICNIRP and include safety margins designed to assure the protection of all persons, regardless of age and health.

The guidelines use a unit of measurement known as Specific Absorption Rate, or SAR. For mobile devices, the SAR limit is 2 W/kg for the head and the body. The highest SAR value for this device when tested at the head was 1.470 W/kg*, and when tested at the body was 1.872 W/kg* with 5 mm distance. The limb (0 mm) SAR limit for mobile devices is 4 W/kg. The highest SAR value for this device when tested at the body with 0 mm distance was 3.640 W/kg*. As mobile devices offer a range of functions, they can be used in other positions, such as on the body as described in this user manual**.

As SAR is measured utilising the device’s highest transmitting power, the actual SAR of this device while operating is typically

below that indicated above. This is due to automatic changes to the power level of the device to ensure it only uses the minimum power required to communicate with the network.

* The tests are carried out in accordance with EN 50360, EN 50566, EN 50663, EN 62209-1 and EN 62209-2.

** Please see body worn operation.

Body Worn Operation

Important safety information regarding radio frequency radiation (RF) exposure:

To ensure compliance with RF exposure guidelines the phone must be used with a minimum of 5 mm separation from the body.

Failure to observe these instructions could result in your RF exposure exceeding the relevant guideline limits.

Limiting Exposure to Radio Frequency (RF) Fields

For individuals concerned about limiting their exposure to RF fields, the World Health Organisation (WHO) provides the following advice:

Precautionary measures: Present scientific information does not indicate the need for any special precautions for the use of mobile phones. If individuals are concerned, they might choose to limit their own or their children’s RF exposure by limiting the length of calls, or using ‘hands-free’ devices to keep mobile

phones away from the head and body.

Further information on this subject can be obtained from the WHO home page http://www.who.int/peh-emf (WHO Fact sheet 193: June 2000).

Distractions

Driving

Full attention must be given to driving at all times in order to reduce the risk of an accident. Using a phone while driving (even with a hands-free kit) can cause distraction and lead to an accident. You must comply with local laws and regulations restricting the use of wireless devices while driving.

Operating Machinery

Full attention must be given to operating the machinery in order to reduce the risk of an accident.

Product Handling

General Statement on Handling and Use

You alone are responsible for how you use your phone and any consequences of its use.
You must always switch off your phone wherever the use of a phone is prohibited. Use of your phone is subject to safety measures designed to protect users and their environment.

- Always treat your phone and its accessories with care and keep them in a clean place.
- Keep the screen and camera lens clean. An unclean screen or camera lens may slow down the phone's reaction to your operations or interfere with the image quality.
- Clean your phone and its accessories with a soft material such as cleaning cloth for eyeglass lenses. Do not use alcohol or other corrosive substances for cleaning or allow them to get inside.
- Do not expose your phone or its accessories to open flames or lit tobacco products.
- Do not expose your phone or its accessories to liquid, moisture or high humidity.
- Do not drop, throw or try to bend your phone or its accessories.
- Do not use harsh chemicals, cleaning solvents, or aerosols to clean the phone or its accessories.
- Do not paint your phone or its accessories.
- To disassemble your phone, contact an authorized service provider or follow the repair instructions.
- Do not attempt to disassemble the phone accessories. Only authorized personnel can do so.
- Do not place your phone inside or near heating equipment or high-pressure containers, such as water heaters, microwave ovens, or hot cooking utensils. Otherwise, your phone may be damaged.

- Please check local regulations for disposal of electronic products.
- Do not carry your phone in your back pocket as it could break when you sit down.

Battery Safety

- Using incompatible battery, charger or power adapter may damage your device, shorten its lifespan or cause a fire, explosion or other hazards.
- The recommended operating temperatures are 0 °C to 35 °C and the storage temperatures are -20 °C to +45 °C. Extreme temperatures can damage the device and reduce the charging capacity and lifespan of your device and battery.

WARNING!

To remove or replace the battery, contact an authorized service provider or follow the repair instructions. If the phone is not properly disassembled, it may cause personal injury and damage to the battery and phone.

- Do not place the device or the battery in or near heating equipment, such as microwave ovens, stoves or radiators. Keep the device and the battery away from excessive heat and direct sunlight. If not, the device or the battery may overheat and cause explosion or fire.
- Do not squeeze or puncture the device, as this can cause explosion or fire.
- Do not throw the device into a fire to avoid explosion.

- Please disconnect the charger when the battery is fully charged. Overcharging may shorten the battery life.
- When not using the device for a long period, please charge the battery about half and then store the device in a cool dry place.
- If the battery damages or shows signs of swelling or leakage, please stop use immediately and contact ZTE or ZTE authorized service provider for replacement.

Small Children

Do not leave your phone and its accessories within the reach of small children or allow them to play with it. They could hurt themselves or others, or could accidentally damage the phone.

Your phone contains small parts with sharp edges that may cause an injury or may become detached and create a choking hazard.

Demagnetization

To avoid the risk of demagnetization, do not allow electronic devices or magnetic media close to your phone for a long time.

Electrostatic Discharge (ESD)

Do not touch the metallic connectors of the nano-SIM card.

Antenna

Do not touch the antenna unnecessarily.

Normal Use Position

When placing or receiving a phone call, hold your phone to your ear, with the bottom towards your mouth.

Airbags

Do not place a phone in the area over an airbag or in the airbag deployment area, as an airbag inflates with great force and serious injury could result. Store the phone in a safe and secure area before driving your vehicle.

Seizures/Blackouts

Your phone can produce a bright or flashing light. A small percentage of people may be susceptible to blackouts or seizures (even if they have never had one before) when exposed to flashing lights or light patterns such as when playing games or watching videos. If you have experienced seizures or blackouts or have a family history of such occurrences, please consult a physician. To reduce the risk of blackouts or seizures, use your phone in a well-lit room and take frequent breaks.

Repetitive Strain Injuries

To minimize the risk of Repetitive Strain Injury (RSI) when texting or playing games with your phone:

- Do not grip the phone too tightly.
- Press the buttons lightly.

- Use the special features which are designed to minimize the times of pressing buttons, such as Message Templates and Predictive Text.
- Take frequent breaks to stretch and relax.

Emergency Calls

This phone, like any other wireless phone, operates using radio signals, which cannot guarantee connection in all conditions. Therefore, you must never rely solely on any wireless phone for emergency communications.

Loud Noise

This phone is capable of producing loud noises, which may damage your hearing. Turn down the volume before using headphones, Bluetooth headsets or other audio devices.

Phone Heating

Your phone may become warm during charging and normal use.

Electrical Safety

Accessories

Use only compatible accessories.

Do not connect with incompatible products or accessories.

Take care not to allow metal objects, such as coins or key rings,

to contact or short-circuit the charging jack. Never puncture the surface of the phone with sharp objects.

Connection to Vehicles

Seek professional advice when connecting a phone interface to the vehicle electrical system.

Faulty and Damaged Products

To disassemble your phone, contact an authorized service provider or follow the repair instructions. Do not attempt to disassemble the phone accessories. Only qualified personnel can service or repair the accessories. If your phone (or its accessories) has been submerged in water, punctured, or subjected to a severe fall, do not use it until you have taken it to be checked at an authorized service center.

Radio Frequency Interference

General Statement on Interference

Care must be taken when using your phone in close proximity to personal medical devices, such as pacemakers and hearing aids.

Please consult your doctor and the device manufacturers to determine if the operation of your phone may interfere with the operation of your medical devices.

Pacemakers

Pacemaker manufacturers recommend that a minimum separation of 15 cm be maintained between a mobile phone and a pacemaker to avoid potential interference with the pacemaker. To achieve this, use the phone on the opposite ear to your pacemaker and do not carry it in a breast pocket.

Hearing Aids

People with hearing aids or other cochlear implants may experience interfering noises when using wireless devices or when one is nearby.

The level of interference depends on the type of the hearing device and the distance from the interference source. Increasing the separation between them may reduce the interference. You may also consult your hearing aid manufacturer to discuss alternatives.

Medical Equipment

Switch off your wireless device when you are requested to do so in hospitals, clinics or healthcare facilities. These requests are designed to prevent possible interference with sensitive medical equipment.

Aircraft

Switch off your wireless device whenever you are instructed to do so by airport or airline staff.

Consult the airline staff about the use of wireless devices onboard the aircraft and enable aeroplane mode of your phone when boarding an aircraft.

Interference in Vehicles

Please note that because of possible interference with electronic equipment, some vehicle manufacturers forbid the use of mobile phones in their vehicles unless a hands-free kit with an external antenna is included in the installation.

Explosive Environments

Petrol Stations and Explosive Atmospheres

In locations with potentially explosive atmospheres, obey all posted signs to turn off wireless devices such as your phone or other radio equipment.

Areas with potentially explosive atmospheres include fueling areas, below decks on boats, fuel or chemical transfer or storage facilities, and areas where the air contains chemicals or particles, such as grain, dust, or metal powders.

Blasting Caps and Areas

Power off your mobile phone or wireless device when in a blasting area or in areas where signs are posted to power off “two-way radios” or “electronic devices” to avoid interfering with blasting operations.

Disposal of Your Old Appliance

	1. When this crossed-out wheeled bin symbol is attached to a product, it means the product is covered by the European Directive 2012/19/EU. 2. All electrical and electronic products should be disposed of separately from the municipal waste stream via designated collection facilities appointed by the government or the local authorities. 3. The correct disposal of your old appliance will help prevent potential negative consequences for the environment and human health.

For this product's recycling information based on WEEE directive, please send an e-mail to weee@zte.com.cn

UK PSTI Statements of Compliance

Hereby, ZTE Corporation declares that Z2459 is in compliance with The Product Security and Telecommunications Infrastructure (Security Requirements for Relevant Connectable Products) Regulations 2023.

The full text of the UK PSTI Statements of Compliance is available at the following Internet address: https://certification.ztedevices.com

EU DECLARATION OF CONFORMITY

Hereby, ZTE Corporation declares that the radio equipment type Z2459 is in compliance with Directive 2014/53/EU.

The full text of the EU declaration of conformity is available at the following Internet address: https://certification.ztedevices.com

The device is restricted to indoor use only when operating in the 5150 to 5350 MHz frequency range.

	AT	BE	BG	HR	CY	CZ	DK
	EE	FI	FR	DE	EL	HU	IE
	IT	LV	LT	LU	MT	NL	PL
	PT	RO	SK	SI	ES	SE	UK(NI)
	NO	IS	LI	CH	TR		

ErP Conformity

If the packaging box includes a charger, it conforms to the Energy-related Product Directive (ErP) 2009/125/EC of the European Parliament and the Council.

The detailed ErP information is available on ZTE website https://certification.ztedevices.com.

Appendix

- Weight range of the critical raw materials and environmentally relevant materials:

Cobalt in the battery		■ < 2 g □ 2~5 g □ > 5 g
Tantalum in capacitors		■ < 0.05 g □ 0.05~0.2 g □ > 0.2 g
Neodymium	in loud speaker	□ < 0.05 g ■ 0.05~0.2 g □ > 0.2 g
	in vibration motor	■ < 0.05 g □ 0.05~0.2 g □ > 0.2 g
	in other magnets	■ < 0.05 g □ 0.05~0.2 g □ > 0.2 g
Gold		□ < 0.02 g ■ 0.02~0.1 g □ > 0.1 g

- Percentage of recycled content for the phone or a part thereof:
  - Glass: 16.8%
  - Aluminum alloy: 2.3%
  - Metal: 0.2%
  - Battery: 25.0%
  - Plastic: 9.3%
  - Plastic + Metal: 3.4%
  - Stainless steel: 6.6%
  - PCBA: 2.4%
  - Metal + Plastic: 14.4%

- Recyclability rate (R_{cyc}): 80.4%
- Minimum battery endurance in number of cycles: 800 cycles (80% power remaining)
- Your phone is rated IP54 for dust and water resistance.